Baseus	产品名称	倍思 天鹅 磁吸桌面支架无线充电器			设计确认	杨雄
	包装编码	PB3093Z			结构材料确认	
	包装尺寸		说明书尺寸	65 X 95mm	参数确认	
	包装材料		说明书材料	100g悦声高白	文案确认	
	包装工艺		说明书工艺		设计师	王秀云
	文件类型	大货文件	备注		设计日期	2021.03.31

K

Baseus倍思

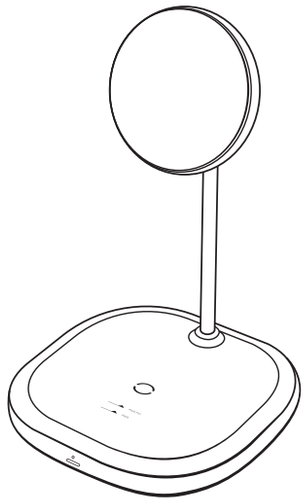

倍思 天鹅 二合一无线磁吸充电支架 20W
(兼容iP12系列)

使用说明书

使用产品前请仔细阅读本使用说明书，并请妥善保管

产品介绍

感谢您选择购买我公司的无线充产品，这是一款支持iP12系列手机充电的快充无线充电器。

1. 产品参数

名称：倍思 天鹅二合一无线磁吸充电支架
型号：BS-W523
材质：塑胶+不锈钢+硅胶
颜色：黑色/白色
接口：Type-C
输入电流：9V⎓2A，12V⎓2A Max.
（建议搭配标配适配器或24W以上的QC/PD协议适配器）
输出功率：支架发射盘 10W Max.
底座发射盘 10W Max.
兼容性：支架发射盘：仅支持iP12系列
底座发射盘：兼容Qi标准的无线充电设备
产品尺寸：106.5mm*106.5mm*158.2mm（不含包装）
产品重量：270g（不含包装）

扫码查看说明书
Scan to View
User Manual

以上数据来源Baseus（倍思）实验室测定值，但因客观环境改变数据会有所不同或误差。

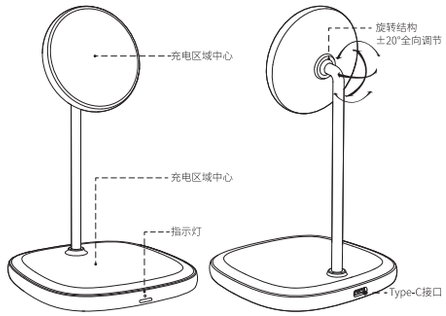

2. 包装清单

无线充电器*1
Type-C数据线1m *1
说明书*1
保修卡*1

3. 使用说明

1. 将无线充电器USB插口插入适配器电源后，然后将支持无线充电的移动设备的无线接收位置对应吸附在无线充电器发射区域上，并且尽量保证无线接收位置与产品中心位置居中对齐。(无线接收位置一般处于移动设备正中央)。
2. 完成充电时，请将无线充电器移除。

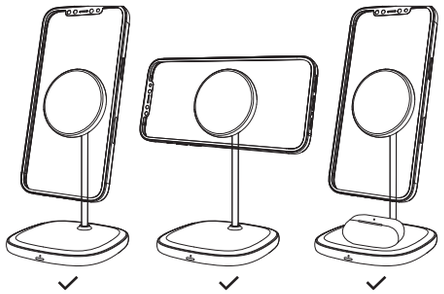

4. 指示灯说明

1. USB插口插入电源适配器后，白色指示灯常亮；
2. 无线充电器给移动设备充电时，白色指示灯呼吸闪烁；
3. 在充电过程中如果指示灯出现快速闪动，说明无线充电器与无线接设备之间通信异常，请检查无线充电器与无线接收设备摆位是否正确，或是否有金属异物在无线充电器与无线接收设备之间。

5. 注意事项

无线充电器给移动设备充电过程中，在移动设备上运行耗电量大的应用程序或长时间在设备上使用应用程序，移动设备发热升高，这属于正常情况，不会影响设备的使用寿命或性能。
● 本产品仅支持苹果12系列自带磁吸无线充电功能的手机进行无线充电；
● 本产品仅支持苹果原装及倍思带有磁吸功能的保护套，不保证兼容第三方磁铁配件兼容性；
● 建议使用带有 QC/PD认证的适配器电源，或其他符合国际安规标准的QC/PD适配器电源（9V⎓2A、12V⎓2A）；
● 设备可以在0°C至35°C区间的环境温度内使用。可以在-20°C至50°C区间的环境温度下存放设备。在推荐的温度范围以外使用或存放设备可能会损坏设备或缩短电池的寿命；
● 请勿让儿童或动物咀嚼或吞咽设备；
● 请勿拆卸、改装或修理设备；
● 请勿将磁条卡（包括信用卡、电话卡、银行存折及登记卡）放置在正在充电的设备附近，避免设备产生的磁场将磁条卡损坏。

6. 电子信息产品有毒有害物质声明

部件名称	有毒有害物质或元素					
	铅 (pb)	汞 (Hg)	镉 (Cd)	六价铬 (Cr VI)	多溴联苯 (PBB)	多溴二苯醚 (PBDE)
PCB	X	O	O	O	O	O
外壳	O	O	O	O	O	O
附件	O	O	O	O	O	O

本表格依据SJ/T 11364的规定编制。
O：表示该有毒有害物质在该部件所有均质材料中的含量均在GB/T 26572标准规定的限量要求以下。
X：表辅有毒有害物质至少在该部件某一均质材料中的含量超出GB/T 26572标准规定的限量要求。
该产品符合欧盟RoHS 2.0指令（2011/65/EU）
温馨提示：5年图标是指"环保有效使用期限"，不是产品质量保证期限。电子产品均含有铅、汞、镉等有毒有害物质，一旦超期使用，有毒有害物质将可能因为发生外泄或突变，对环境造成污染，或对人身、财产造成严重损害。"环保使用期限"，意味着所有的电子产品都将被要求在此有效限期内使用，超过安全使用年限之后出现的安全风险问题，我们不再对产品质量负责。

Copyright©2010-2021 Shenzhen Times Innovation Technology Co., Ltd. All Rights Reserved

品牌名：Baseus倍思
公司：深圳市时商创展科技有限公司
地址：深圳市龙岗区坂田街道岗头社区雪岗路2008号倍思智能园B栋五层
执行标准：Q/SSCZ 021-2020
热线：4000-712-711　　网址：www.baseus.com

PB3093Z
倍思设计
中国制造

Baseus

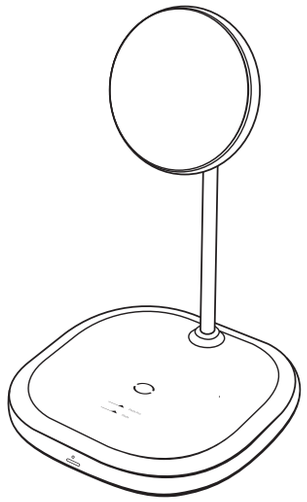

Baseus Swan 2-in-1 Wireless Magnetic Charging Bracket 20W
(suit for iP12)

User Manual

Please Read This User Manual Completely And Keep It Properly

Product Introduction:

Thanks for your choosing our wireless charger, Before you use this product, Please read this manual carefully and save it.

1. Product parameters

Name: Baseus Swan 2-in-1 Wireless Magnetic Charging Bracket
Model No.: BS-W523
Material: Plastic + Stainless steel + Silica gel
Color: Black/White
Interface: Type-C
Input Current: 9V⎓2A, 12V⎓2A Max.
(It is recommended to use with a standard adapter or 24W or higher QC/PD adapter.)
Output Power: Up to 10W charging stand
Up to 10W charging dock
Compatibility: Charging stand: Only compatible with iP12 series
Charging dock: Supports Qi-compliant wireless charging devices
Product Size: 106.5mm*106.5mm*158.2mm (Without packaging)
Product Weight: 270g (Without packaging)

The above data are measured by the Baseus laboratory,
the actual use will be slightly different depending on the specific circumstances.

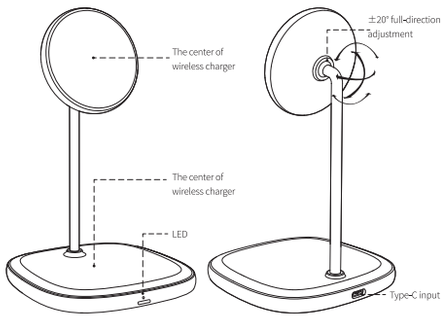

2. Packing list

Wireless charger*1
Type-C data cable 1m* 1
User manual*1
Warranty card*1

3. User instruction

1. Plug USB port into the adapter port, and put your phone on the emission area, make sure the receiving area of the mobile is magnetic suction with the emission area of the wireless charger. (normally the receiving area is in the middle of the mobile)
2. Remove your phone once charging is completed.

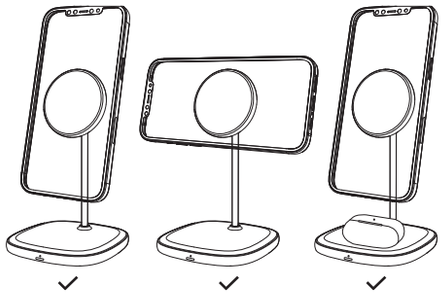

4. Indicator

1. Connect the wireless charger to the USB port, The white, indicator will be light on;
2. Indicator light is breath at charging mode;
3. If indicator light flashes very fast, please check if you placed the Wireless Charger and the mobile properly and please make sure there is no metal placed between the Charger and the mobile.

5. Safety Instructions

If your mobile is running APP with high power consumption, or is running APP for a long time, while charging wirelessly, the mobile may heat up. It is normal situation, will not influence the life or performance of the mobile and the Wireless Charger.
● This charger only supports iP 12 series with magnetic wireless charging function;
● This chargeronly compatible with standard iP12 series cases and Baseus magnetic cases. Third-party magnet accessories may not be compatible with the charger;
● It is recommended to use PD certified adapters, or other PD adapters that meet international safety standards(9V⎓2A,12V⎓2A);
● The applicable operation temperature range is from 0°C to 35°C. And the storage temperature range is from -20°C to 50°C. Using the Wireless Charger out of the suggested temperature range may damage the product or shorten battery life;
● Avoid children and pets chewing, swallowing the Wireless charger;
● Do not disassemble, modify or repair the Wireless Charger by yourself;
● Do not place the magnetic stripe card (e.g. credit card, phone card, bank passbook and record card) near the Wireless Charger while charging, to avoid the magnetic field generated by the Wireless Charger to damage the magnetic stripe card.

6. Statement on Toxic and Hazardous Substances in Electronic Information Products

Part Description	Toxic or hazardous substances and elements					
	Lead (Pb)	Mercury (Hg)	Cadmium (Cd)	Hexavalent chromium (Cr VI))	Polybrominated biphenyls (PBB)	Polybrominated diphenyl ethers (PBDE)
PCB	X	○	○	○	○	○
Casing	○	○	○	○	○	○
Accessory	○	○	○	○	○	○

This form is compiled in accordance with SJ/T 11364.
O: It indicates that the content of the toxic and harmful substance in all homogeneous materials of the component is below the limit specified in GB/T 26572 standard.
X: The content of toxic and harmful substances in at least one homogeneous material of this part exceeds the limit stipulated in GB/T 26572 standard.
This product complies with EU RoHS 2.0 Directive(2011/65/EU)
Warm Tip: The 5-year icon refers to the "effective life of environmental protection", not the product quality assurance period. Electronic products all contain toxic and harmful substances such as lead, mercury and cadmium. Once they are overused, toxic and harmful substances may leak or mutate, cause pollution to the environment, or cause serious damage to people and property. The term of "environmental protection use" means that all electronic products will be required to use within this effective period. We will no longer be responsible for the quality of the products due to the safety risks that arise after the safe use period.

This device complies with part 15 of the FCC Rules. Operation is subject to the following two conditions: (1) this device may not cause harmful interference, and (2) this device must accept any interference received, including interference that may cause undesired operation.
Any changes or modifications not expressly approved by the party responsible for compliance could void the user's authority to operate the equipment.
NOTE: This equipment has been tested and found to comply with the limits for a Class B digital device, pursuant to Part 15 of the FCC Rules. These limits are designed to provide reasonable protection against harmful interference in a residential installation. This equipment generates, uses and can radiate radio frequency energy and, if not installed and used in accordance with the instructions, may cause harmful interference to radio communications. However, there is no guarantee that interference will not occur in a particular installation.
If this equipment does cause harmful interference to radio or television reception, which can be determined by turning the equipment off and on, the user is encouraged to try to correct the interference by one or more of the following measures:
– Reorient or relocate the receiving antenna.
– Increase the separation between the equipment and receiver.
– Connect the equipment into an outlet on a circuit different from that to which the receiver is connected.
– Consult the dealer or an experienced radio/TV technician for help.

Shenzhen Times Innovation Technology Co., Ltd.
Add: 5th Floor, Building B, Baseus Intelligence Park, No.2008, Xuegang Rd, Gangtou Community, Bantian Street, Longgang District, Shenzhen
Executive Standard: Q/SSCZ 021-2020
Hotline: +86-4000-712-711　Website: www.baseus.com

Copyright©2010-2021 Shenzhen Times Innovation Technology Co., Ltd. All Rights Reserved

PB3093Z
Designed by Baseus
Made in China