Parts Manual

Mfg. No: 121Q02-0125-F1

Copyright © Briggs and Stratton. All Rights reserved

28-Nov-2018

Model Components

Page

Air Cleaner. 4
Alternator, Electric Starter, Ignition. 6
Blower Housing, Cover/Guards, Flywheel, Rewind Starter. 8
Camshaft, Crankshaft, Cylinder, Piston/Rings/Connecting Rod, Warning Label. 10
Carburetor, Carburetor Overhaul Kit. 12
Controls, Governor Spring, Thermostat. 14
Cylinder Head, Gasket Set-Valves, Valves. 16
Exhaust System. 18
Fuel Supply, Lubrication. 20
Gasket Set-Engine, Sump. 22
Replacement Engine. 24

Not For Reproduction

Copyright © Briggs and Stratton. All Rights reserved

Mfg. No: 121Q02-0125-F1

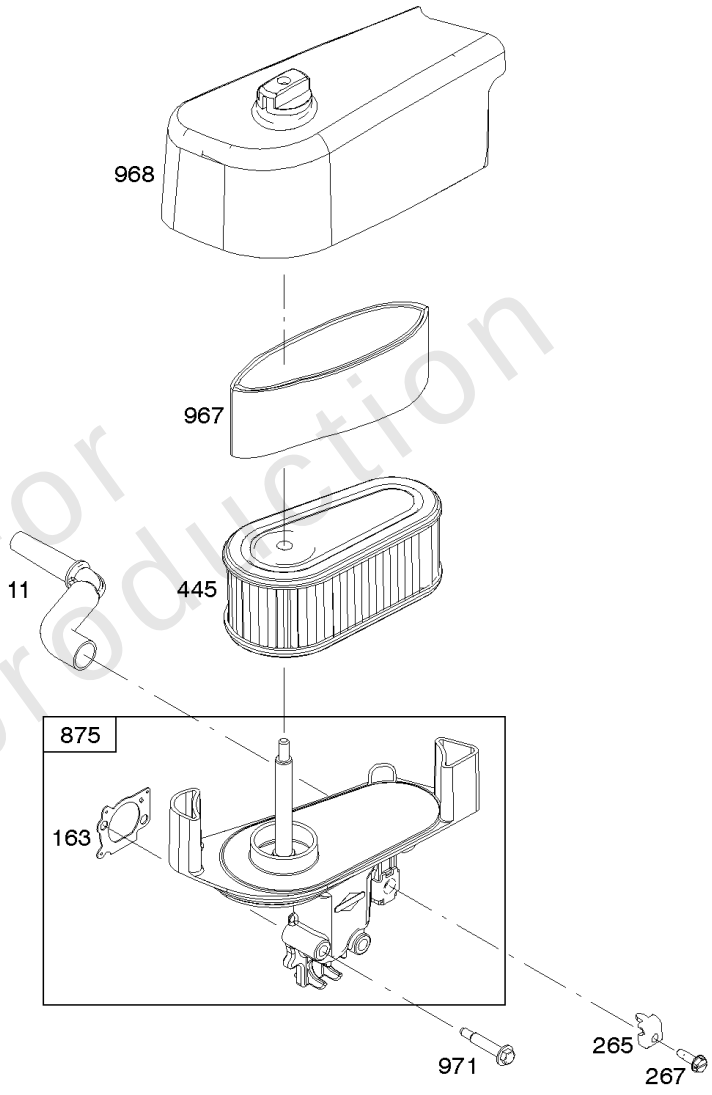

Not For Reproduction

Copyright © Briggs and Stratton. All Rights reserved

Air Cleaner

REF NO	PART NO	QTY	DESCRIPTION
11	796478		Tube-Breather
163	691894		Gasket-Air Cleaner
265	691024		CLAMP, Casing
267	691044		SCREW -(Casing Clamp)
445	795066		Filter-A/C Cartridge
875	796492		Base-Air Cleaner
967	796254		Filter-Pre Cleaner
968	796493		Cover-Air Cleaner
971	690349		Screw -(Air Cleaner Base to Carburetor/Throttle Body)

Not For Reproduction

Alternator, Electric Starter, Ignition

Mfg. No: 121Q02-0125-F1

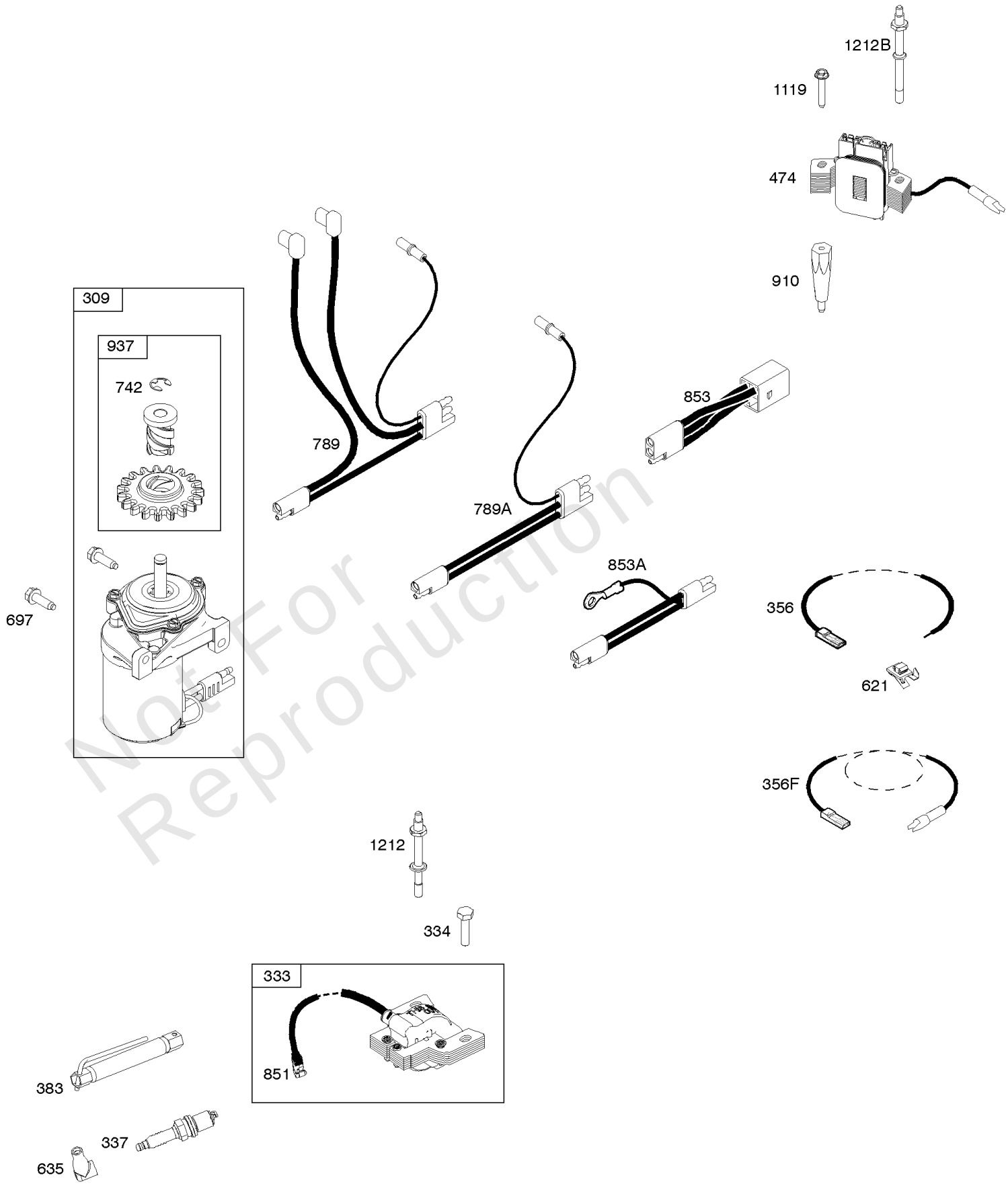

Not For Reproduction

Alternator, Electric Starter, Ignition

REF NO	PART NO	QTY	DESCRIPTION
333	796499		Armature-Magneto
334	793454		Screw -(Magneto Armature)
337	692051		Plug-Spark -(Resistor)
356	692390		Wire-Stop
383	19576S		WRENCH, Spark Plug
621	692310		Switch-Stop
635	66538S		BOOT, Spark Plug
697	691127		SCREW -(Starter Motor) (Drive Cap)
742	93941		RETAINER, E Ring
851	493880S		TERMINAL, Spark Plug
853A	695897		Adapter-Wire
910	796498		Stud -(Alternator)
1119	794100		Screw -(Alternator)
1212	796537		Stud -(Blower Housing)
1212B	797002		Stud -(Blower Housing) (Used With Alternator Only)

Not For Reproduction

Blower Housing, Cover/Guards, Flywheel, Rewind Starter

Mfg. No: 121Q02-0125-F1

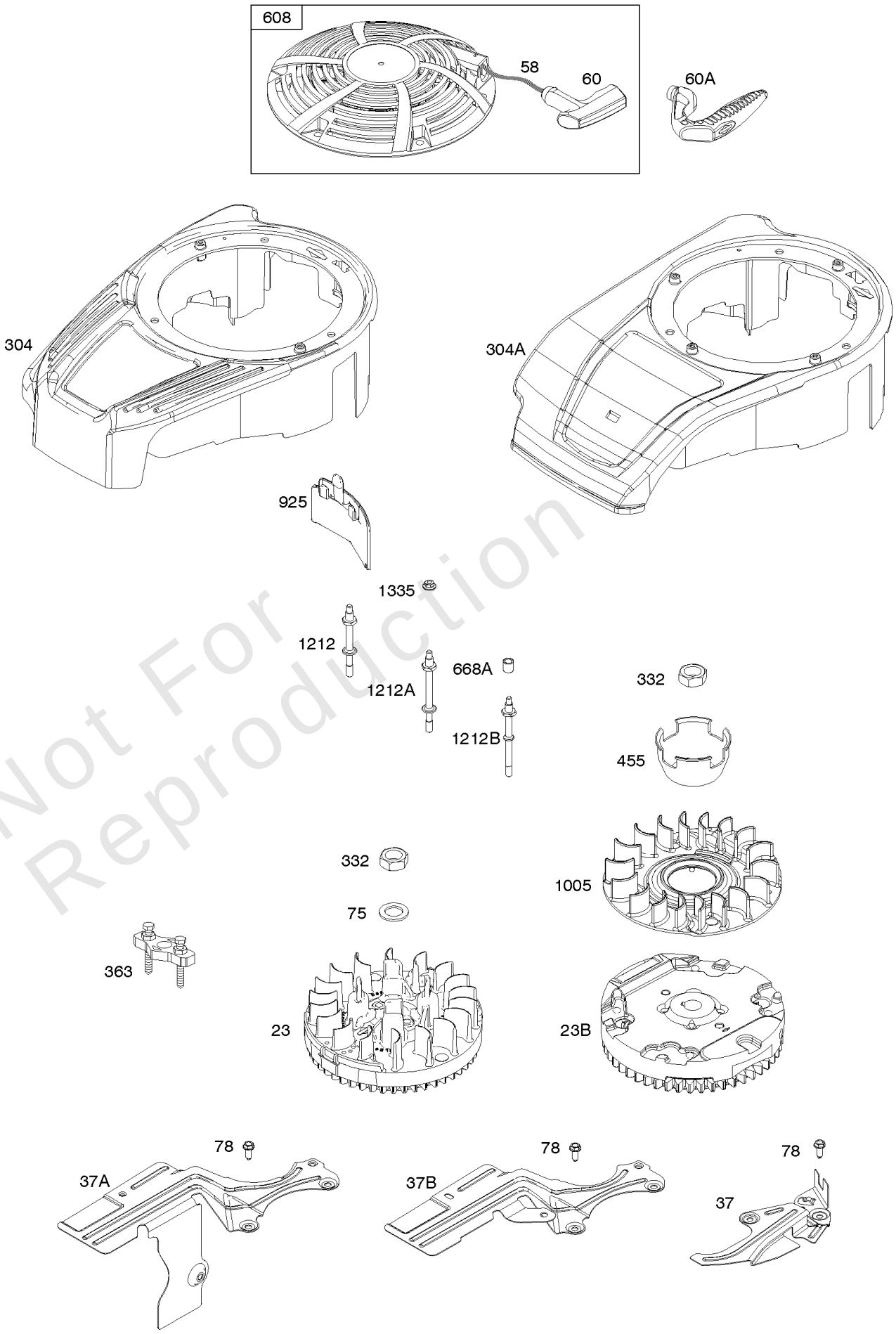

Not For Reproduction

Blower Housing, Cover/Guards, Flywheel, Rewind Starter

REF NO	PART NO	QTY	DESCRIPTION
23	590420		Flywheel -(Aluminum)
37	590921		Guard-Flywheel
37B	799155		Guard-Flywheel
58	697316		Rope-Starter -(Cut To Required Length)
60	281434S		Grip-Starter Rope
60A	799716		Grip-Starter Rope -(Ergonomic Grip)
75	691736		Washer -(Flywheel)
78	793480		SCREW -(Flywheel Guard)
304	796692		Housing-Blower -(Rewind Start)
332	690662		Nut -(Flywheel)
363	19069		Puller-Flywheel
455	796615		CUP, Flywheel
608	796497		Starter-Rewind
668A	797383		Spacer
925	796531		Cover-Linkage
1005	796614		Fan-Flywheel
1212	796537		Stud -(Blower Housing)
1212A	793479		Stud -(Blower Housing)
1212B	797002		Stud -(Blower Housing) (Used With Alternator Only)
1335	793481		Nut -(Blower Housing)

Not For Reproduction

Camshaft, Crankshaft, Cylinder, Piston/Rings/Connecting Rod, Warning Label

Mfg. No: 121Q02-0125-F1

1319 WARNING LABEL
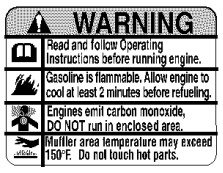
***REQUIRED** when replacing parts with warning labels affixed.*

1319A WARNING LABEL
***REQUIRED** when replacing parts with warning labels affixed.*

1330 REPAIR MANUAL
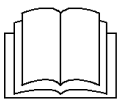

1036 EMISSIONS LABEL

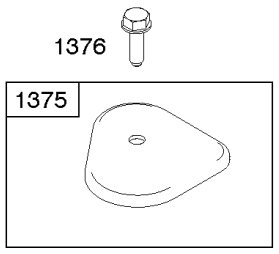

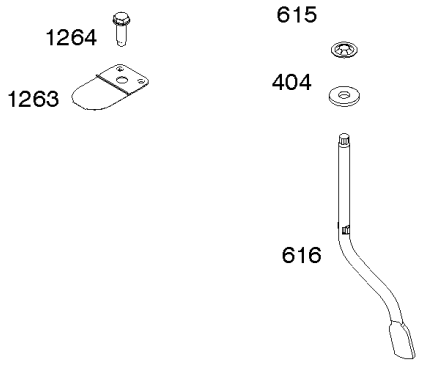

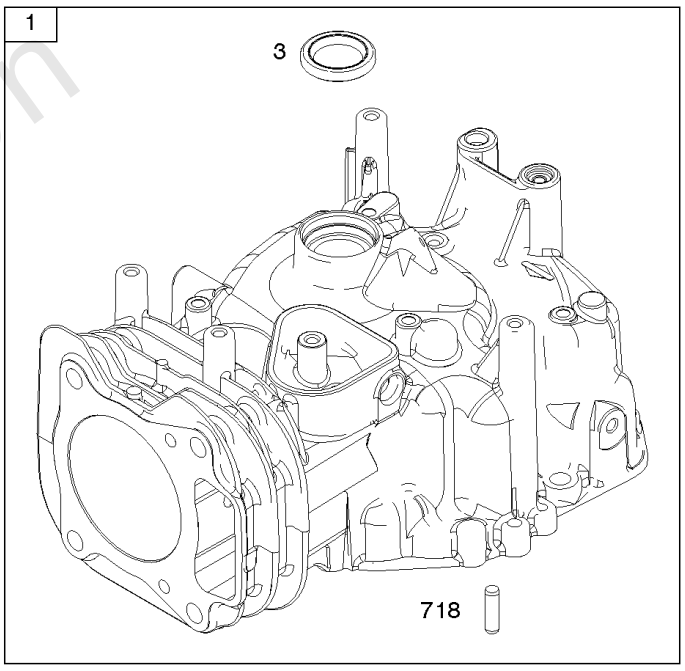

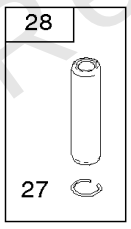

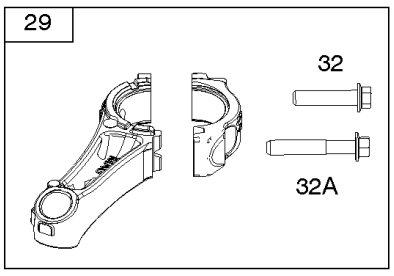

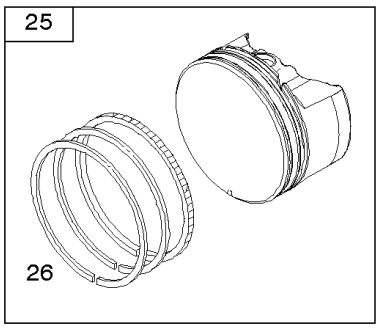

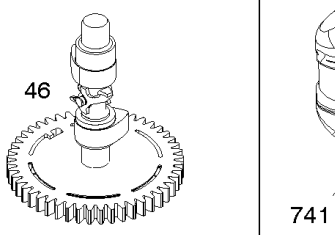

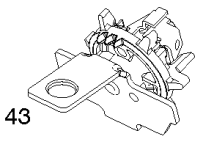

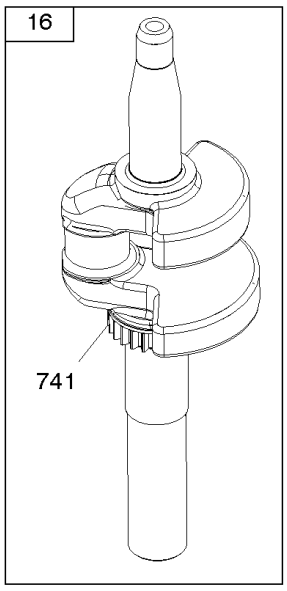

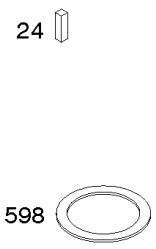

Not For Reproduction

Camshaft, Crankshaft, Cylinder, Piston/Rings/Connecting Rod, Warning Label

REF NO	PART NO	QTY	DESCRIPTION
1	798947		Cylinder Assembly
3	299819S		SEAL, Oil -(Magneto Side)
16	796468		CRANKSHAFT
24	222698S		KEY, Flywheel
25	591284		Piston Assembly -(Standard)
25	591285		Piston Assembly -(.020" Oversize)
26	591286		Ring Set -(Standard) -Used After Code Date 11063000
26	591287		Ring Set -(.020" Oversize) -Used After Code Date 11063000
26	590405		Piston Assembly -(.020" Oversize) -Used Before Code Date 11070100
26	590404		Ring Set -(Standard) -Used Before Code Date 11070100
27	691588		Lock-Piston Pin
28	298909		Pin-Piston
29	796470		Rod-Connecting
32	691664		Screw -(Connecting Rod)
32A	695759		Screw -(Connecting Rod)
43	796650		Slinger-Governor/Oil
46	694039		Camshaft
404	690272		WASHER -(Governor Crank)
598	592587		Shim-End Play -(Crankshaft or Camshaft Bearing)
615	690340		RETAINER, Governor Shaft
616	798327		Crank-Governor
718	690959		PIN, Locating
741	797521		Gear-Timing
1036	-----		Label-Emissions -(Available From A Briggs & Stratton Authorized Dealer)
1263	697124		REED, Breather
1264	793453		SCREW -(Breather Reed)
1319	794467		LABEL, Warning
1319A	797669		LABEL, Warning
1330	279000		Repair Manual
1375	796476		Cover-Breather Reed
1376	794451		Screw -(Breather Reed Cover)

Not For Reproduction

Copyright © Briggs and Stratton. All Rights reserved

Mfg. No: 121Q02-0125-F1

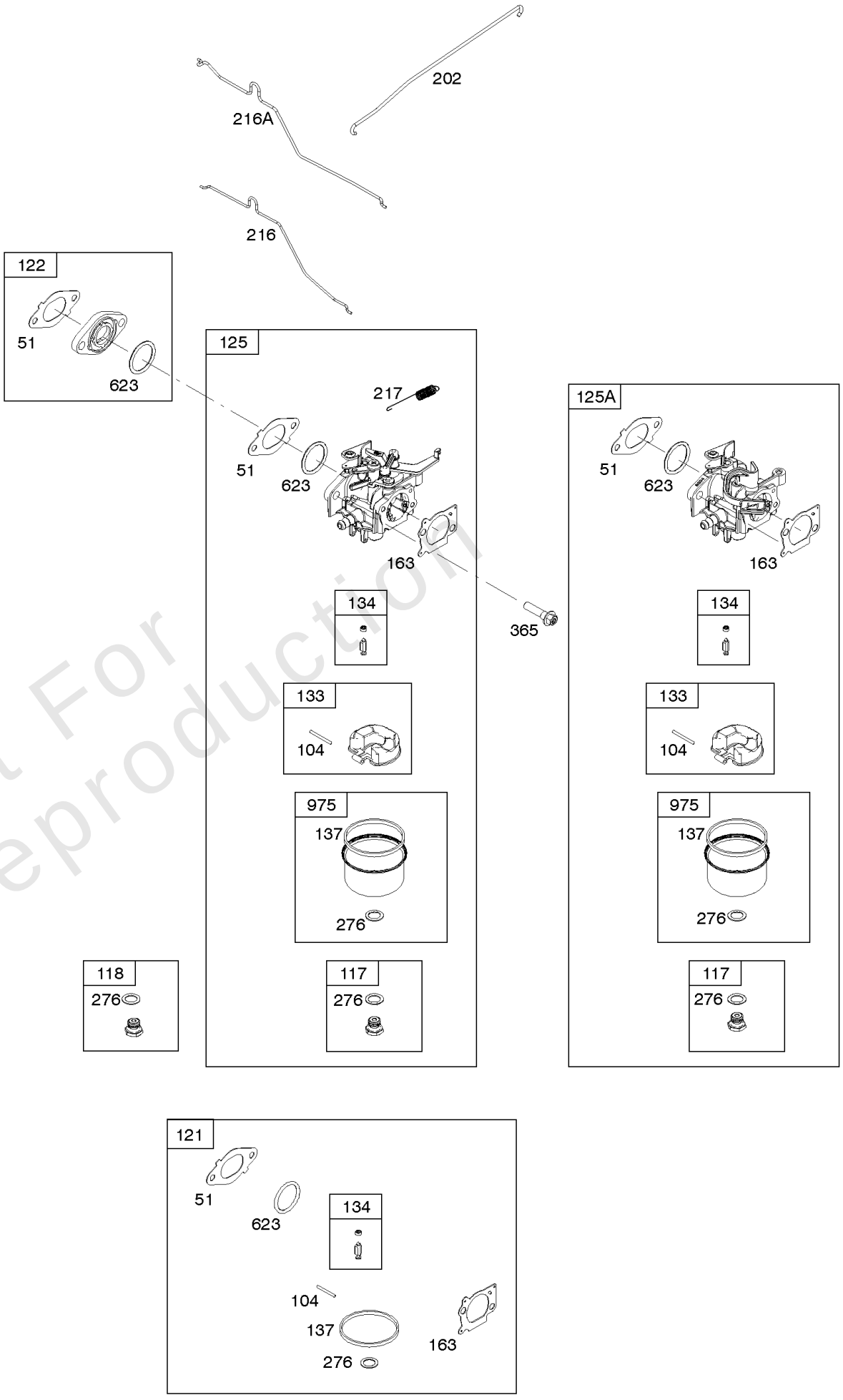

Not For Reproduction

Carburetor, Carburetor Overhaul Kit

REF NO	PART NO	QTY	DESCRIPTION
51	796596		Gasket-Intake
104	797622		Pin-Float Hinge
117	697355		Jet-Main -(Standard) -Used Before Code Date 11070100
117	798661		Jet-Main -(Standard) -Used After Code Date 11063000
118	494870		Jet-Main -(High Altitude) -Used Before Code Date 11070100
118	799605		Jet-Main -(High Altitude) -Used After Code Date 11063000
121	592172		Kit-Carburetor Overhaul -Used After Code Date 11063000
121	796612		Kit-Carburetor Overhaul -Used Before Code Date 11070100
122	796595		Spacer-Carburetor
125	796608		Carburetor -Used Before Code Date 11070100
125	591137		Carburetor -Used After Code Date 11063000
133	398187		Float-Carburetor -Used Before Code Date 11070100
133	797626		Float-Carburetor -Used After Code Date 11063000
134	398188		Kit-Needle/Seat -Used Before Code Date 11070100
134	799177		Kit-Needle/Seat -Used After Code Date 11063000
137	797625		Gasket-Float Bowl -Used After Code Date 11063000
137	796610		Gasket-Float Bowl -Used Before Code Date 11070100
163	691894		Gasket-Air Cleaner
202	796657		Link-Mechanical Governor
216	796485		Link-Choke -Used Before Code Date 11070100
216A	798944		Link-Choke -Used After Code Date 11063000
217	798900		Spring-Choke Return -Used Before Code Date 11070100
217	799179		Spring-Choke Return -Used After Code Date 11063000
276	271716		Washer-Sealing -Used Before Code Date 11070100
276	797632		Washer-Sealing -Used After Code Date 11063000
365	793458		Screw -(Carburetor/Throttle Body)
623	793628		Seal-O Ring -(Carburetor Spacer)
975	796611		Bowl-Float -Used Before Code Date 11070100
975	797631		Bowl-Float -Used After Code Date 11063000

Not For Reproduction

Copyright © Briggs and Stratton. All Rights reserved

Controls, Governor Spring, Thermostat

Mfg. No: 121Q02-0125-F1

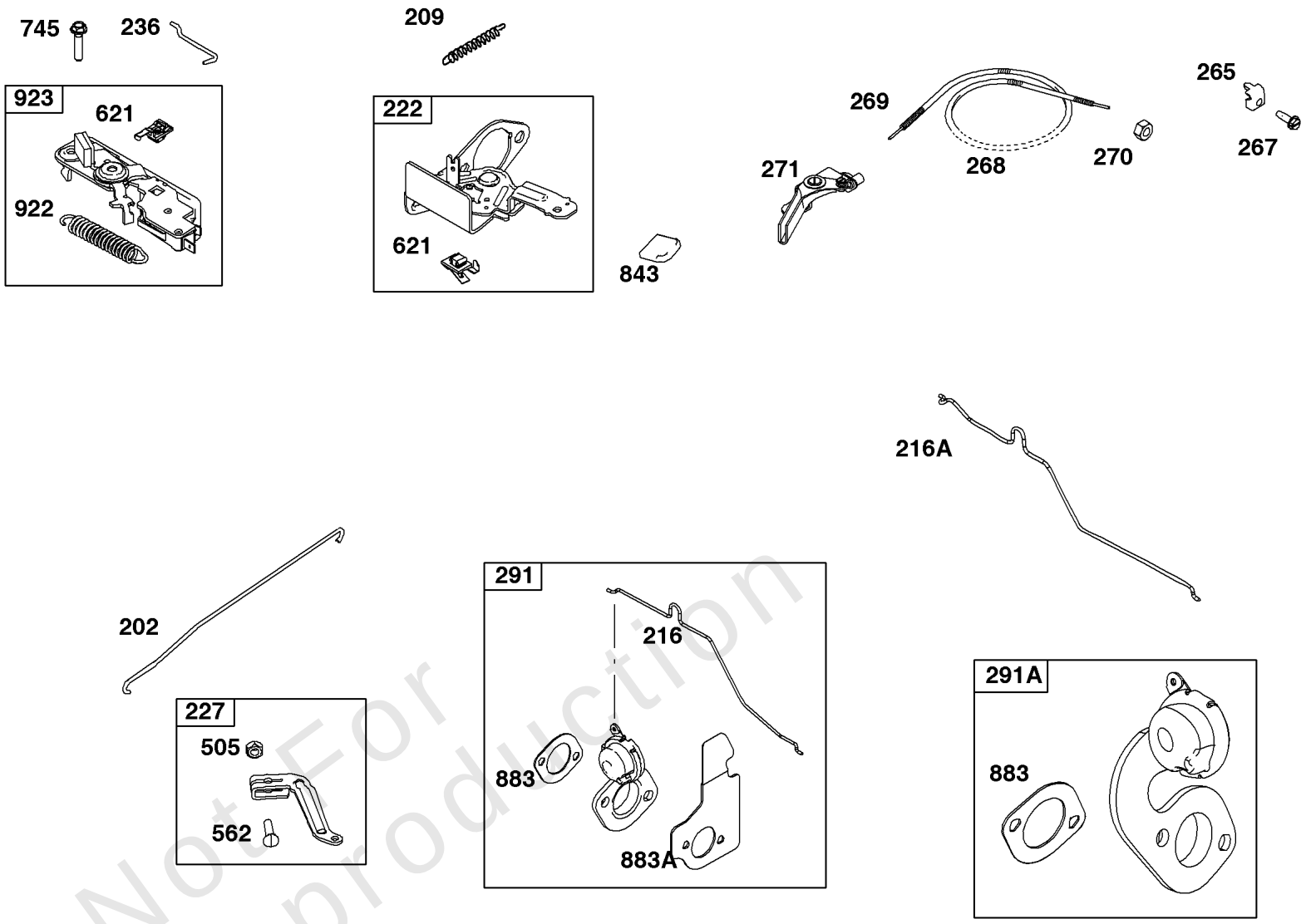

Not For Reproduction

Copyright © Briggs and Stratton. All Rights reserved

Controls, Governor Spring, Thermostat

REF NO	PART NO	QTY	DESCRIPTION
202	796657		Link-Mechanical Governor
209	796484		SPRING, Governor
216	796485		Link-Choke -Used Before Code Date 11070100
216A	798944		Link-Choke -Used After Code Date 11063000
222	796482		Bracket-Control -(Manual Friction, Remote, & Fixed Speed Control)
227	796487		Lever-Governor Control
236	691826		Link-Lockout
265	691024		CLAMP, Casing
267	691044		SCREW -(Casing Clamp)
268	691025		CASING, Control Wire -(Cut To Required Length)
269	691026		WIRE, Control -(Cut To Required Length)
270	691027		NUT -(Control Wire Casing)
271	691028		Lever-Control
291A	798938		Thermostat
505	793515		NUT -(Governor Control Lever)
562	793514		Bolt -(Governor Control Lever)
621	692310		Switch-Stop
745	793491		Screw -(Brake)
843	691884		Sleeve-Lever
883	793497		Gasket-Exhaust
883A	796677		Gasket-Exhaust
922	692135		Spring-Brake
923	796635		Brake

Not For Reproduction

Cylinder Head, Gasket Set-Valves, Valves

Mfg. No: 121Q02-0125-F1

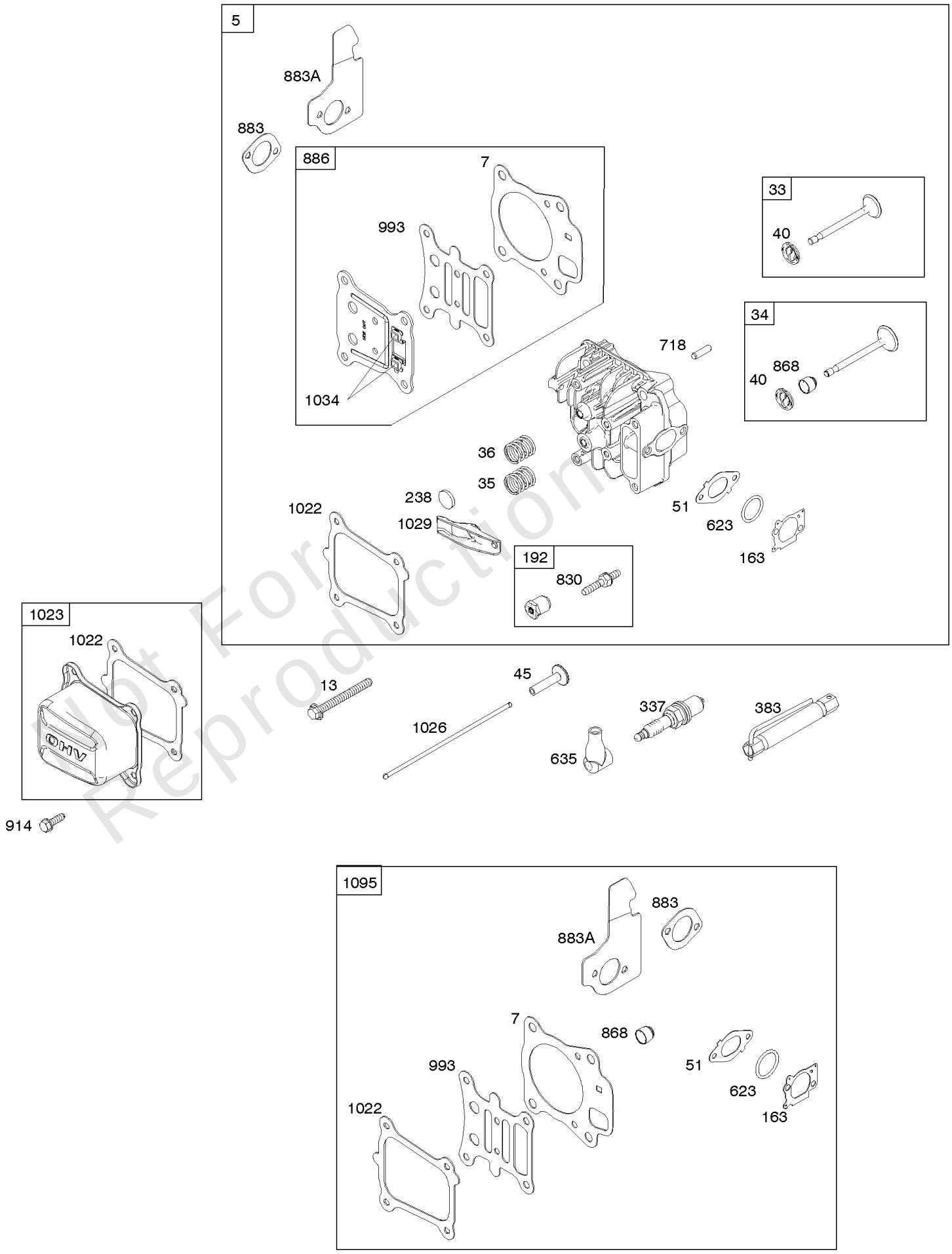

Not For Reproduction

Cylinder Head, Gasket Set-Valves, Valves

REF NO	PART NO	QTY	DESCRIPTION
5	796471		Head-Cylinder
7	796475		Gasket-Cylinder Head
13	793451		Screw -(Cylinder Head)
33	499642		Valve-Exhaust
34	795443		Valve-Intake
35	691304		Spring-Valve -(Intake)
36	691304		Spring-Valve -(Exhaust)
40	692194		Retainer-Valve
45	690977		TAPPET, Valve
51	796596		Gasket-Intake
163	691894		Gasket-Air Cleaner
192	796631		Adjuster-Rocker Arm
238	691300		Cap-Valve
337	692051		Plug-Spark -(Resistor)
383	19576S		WRENCH, Spark Plug
623	793628		Seal-O Ring -(Carburetor Spacer)
635	66538S		BOOT, Spark Plug
718	690959		PIN, Locating
830	796472		Stud-Rocker Arm
868	795440		Seal-Valve
883	793497		Gasket-Exhaust
883A	796677		Gasket-Exhaust
886	799492		Gasket Kit-Cylinder Head/Plate
914	794451		Screw -(Rocker Cover)
993	796473		Gasket-Cylinder Head Plate
1022	796480		Gasket-Rocker Cover
1023	796479		Cover-Rocker
1026	796481		Rod-Push
1029	691230		Arm-Rocker
1034	691343		Guide-Push Rod
1095	592174		Gasket Set-Valve

Not For Reproduction

Copyright © Briggs and Stratton. All Rights reserved

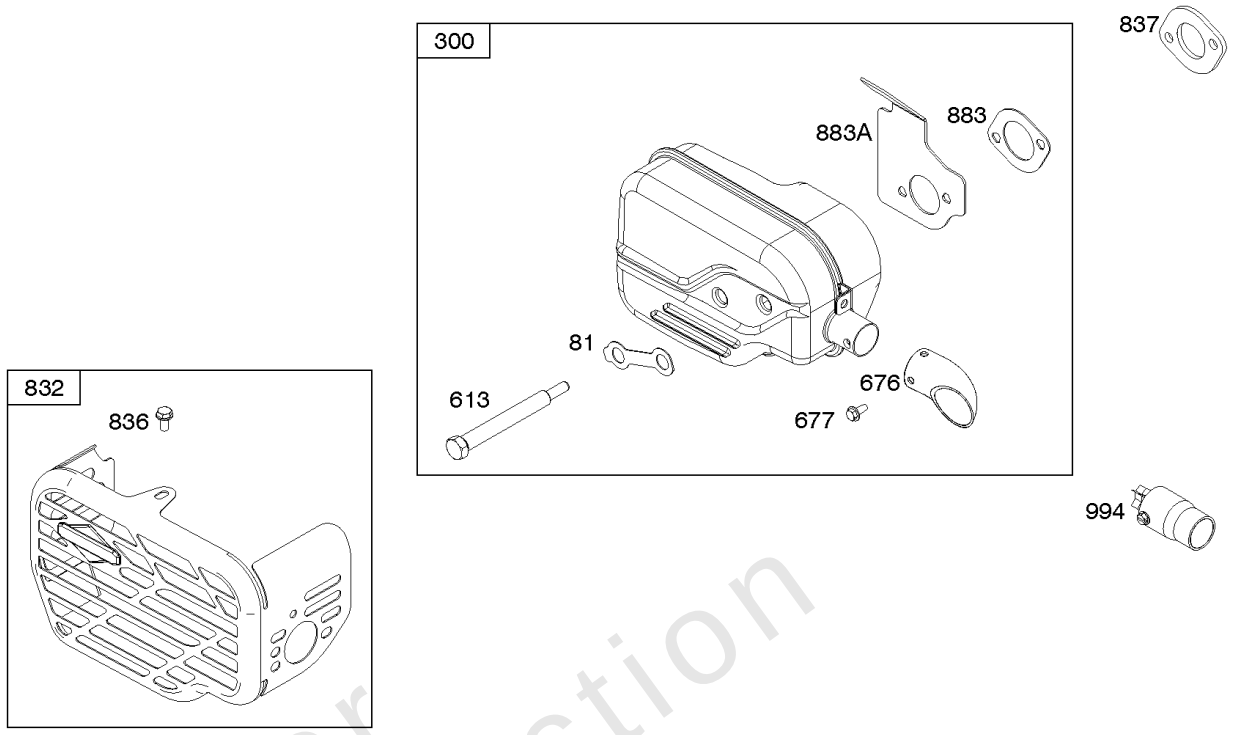

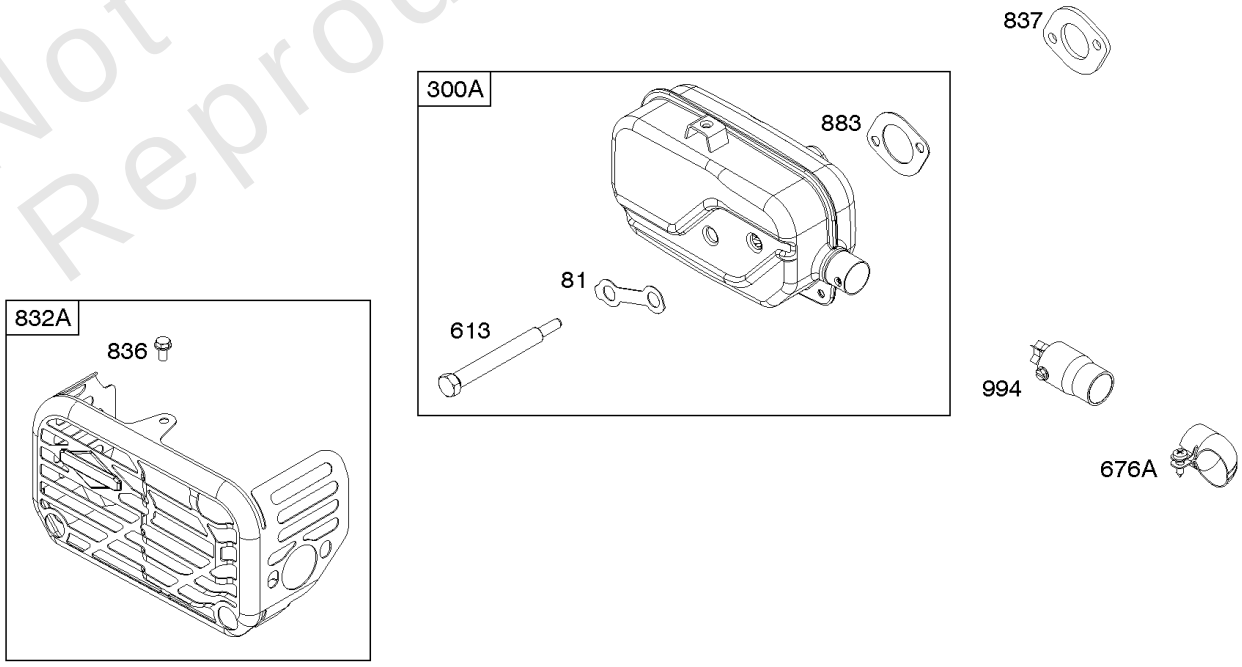

Not For Reproduction

Exhaust System

REF NO	PART NO	QTY	DESCRIPTION
81	691740		Lock-Muffler Screw
300A	798940		Muffler
613	796496		Screw -(Muffler)
676	692010		Deflector-Muffler
676A	799187		Deflector-Muffler
677	690661		SCREW -(Muffler Deflector)
832A	593411		Guard-Muffler
836	793500		Screw -(Muffler Guard)
837	797735		Spacer-Muffler
883	793497		Gasket-Exhaust
883A	796677		Gasket-Exhaust
994	690813		Arrestor-Spark

Not For Reproduction

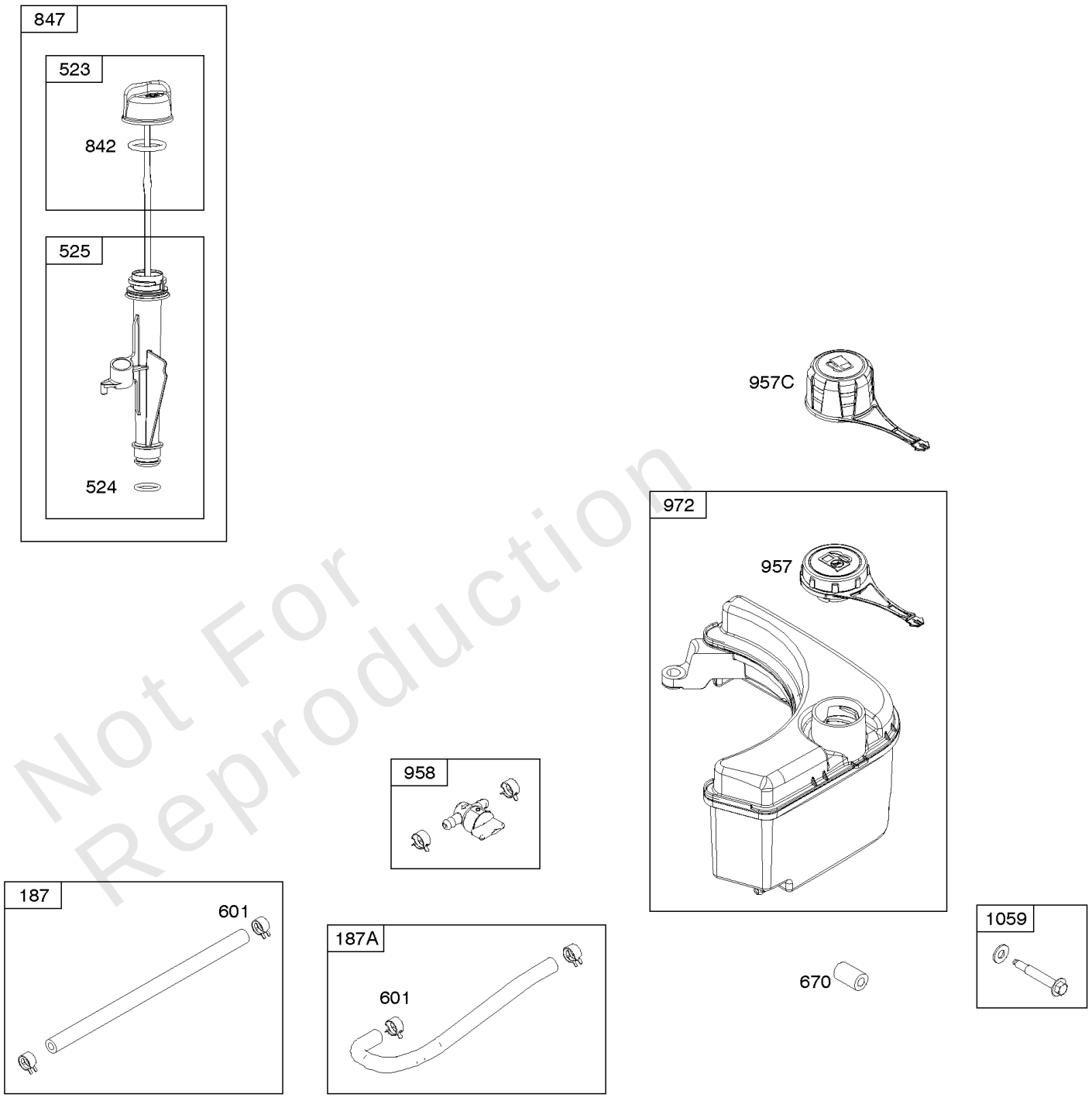

Not For Reproduction

Fuel Supply, Lubrication

REF NO	PART NO	QTY	DESCRIPTION
187	791766		LINE, Fuel -(Cut To Required Length)
187A	796491		Line-Fuel -(Formed Hose)
523	796503		DIPSTICK
524	692296		Seal-Dipstick Tube
525	796502		Tube-Dipstick
601	791850		CLAMP, Hose
670	793485		Spacer-Fuel Tank
842	691031		SEAL, O-Ring -(Dipstick Tube)
847	796501		Dipstick/Tube Assembly
957	799585		Cap-Fuel Tank
957C	796577		Cap-Fuel Tank
958	698183		VALVE, Fuel Shut Off
972	590949		Tank-Fuel
1059	793471		Kit-Screw/Washer

Not For Reproduction

Gasket Set-Engine, Sump

Mfg. No: 121Q02-0125-F1

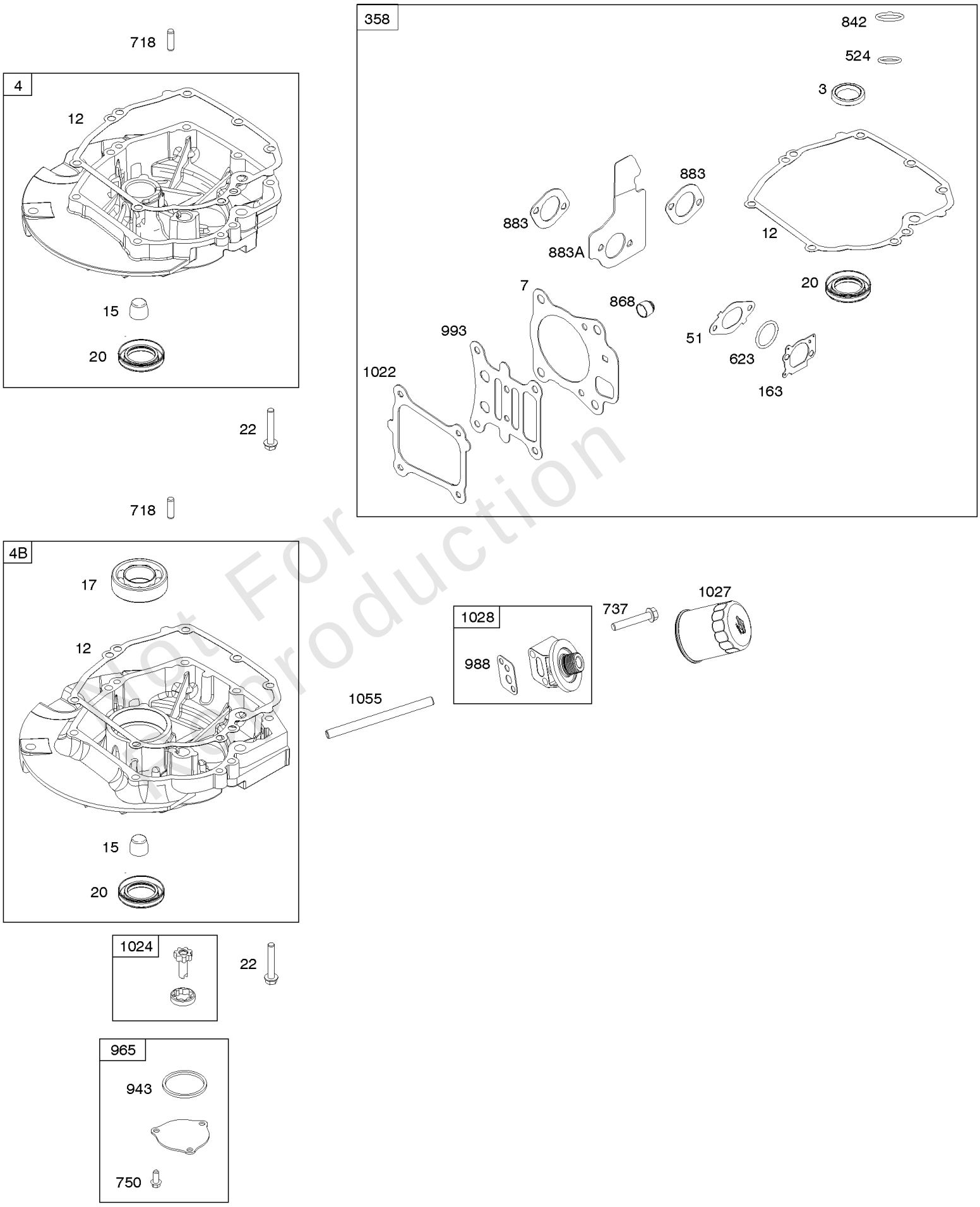

Not For Reproduction

Gasket Set-Engine, Sump

REF NO	PART NO	QTY	DESCRIPTION
3	299819S		SEAL, Oil -(Magneto Side)
4	493279		Sump, Engine
7	796475		Gasket-Cylinder Head
12	692232		Gasket-Crankcase
15	691680		PLUG, Oil Drain -(Square Socket)
17	798538		Bearing-Ball
20	399781S		Seal-Oil -(PTO Side)
22	691092		Screw -(Crankcase Cover/Sump)
51	796596		Gasket-Intake
163	691894		Gasket-Air Cleaner
358	592173		Gasket Set-Engine
524	692296		Seal-Dipstick Tube
623	793628		Seal-O Ring -(Carburetor Spacer)
718	690959		PIN, Locating
737	692511		Screw -(Oil Filter Adapter)
750	691147		Screw -(Oil Pump Cover)
842	691031		SEAL, O-Ring -(Dipstick Tube)
868	795440		Seal-Valve
883	793497		Gasket-Exhaust
883A	796677		Gasket-Exhaust
943	692514		Seal-O Ring -(Oil Pump Cover)
965	692507		Cover-Oil Pump
988	692515		Gasket-Oil Adapter
993	796473		Gasket-Cylinder Head Plate
1022	796480		Gasket-Rocker Cover
1024	692508		Pump-Oil
1027	795990		Filter-Oil
1028	796522		Adapter-Oil Filter
1055	796524		Tube-Oil Pump

Not For Reproduction

Copyright © Briggs and Stratton. All Rights reserved

Replacement Engine

REF NO	PART NO	QTY	DESCRIPTION
	121Q022025	1	Replacement Engine
	798773	1	Replacement Short Block
	698183	1	VALVE, Fuel Shut Off -Add Part
	-----		Top No-Load Speed: 3300 -Trim: ALL
	-----		Service Note: Transfer Muffler and/or Spark Arrester Assembly from the original engine if suitable for additional service or add new parts as required

Not For Reproduction

Copyright © Briggs and Stratton. All Rights reserved