BRILLIANT WONDERS® SMART SYNC®

PROGRAM ADAPTER FOR BRILLIANT WONDERS LED WATERFALLS

CMP 25677-950/900-000

- Conforms To UL STD 8750, Certified To CSA STD C22.2 250.13
- Smart Sync 36 Watt - Rated Max 3.0A @ 12VAC - Controls up to 8ft of LED Waterfalls
- Smart Sync 60 Watt - Rated Max 5.0A @ 12VAC - Controls up to 12ft of LED Waterfalls
- Only use 12VAC input power from an approved low voltage landscape or pool/spa lighting transformer
- Each Waterfall requires 5 Watts per Foot
- Always Use with Class 2 Isolated transformer in between pool controls and Smart Sync.
- Not compatible with CMP Brilliant Wonders Colorwheel Control

SCAN WITH YOUR PHONE CAMERA FOR STEP BY STEP INSTRUCTIONS OR VISIT C-M-P.COM/TECH

IMPORTANT! The Smart Sync LED Waterfall Adapter should not be used with any other Brilliant Wonders products. Never use in conjunction with the LED Waterfall Colorwheel Controls. Use of the LED Waterfall Smart Sync Adapter requires connection to an OEM control system or control switch.

This product is for use with the Brilliant Wonders LED Waterfall only.

STEP 1

Using a flathead screwdriver, turn the dial until the desired program is selected. (See page 3 for program details)

Dial Setting	Style
1	J-Style
2	H-Style
3	P-Style

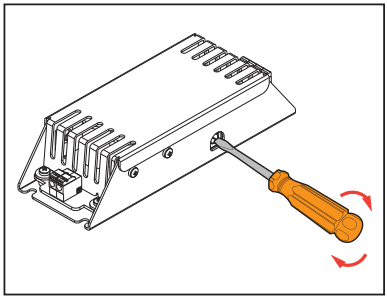

STEP 2

Mount Smart Sync control box in a NEMA approved weatherproof enclosure (mounting screws not included).

CMP Part #: 25650-100-210

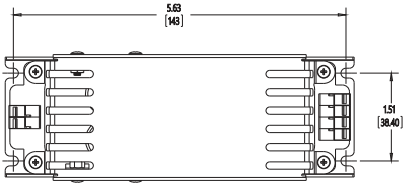

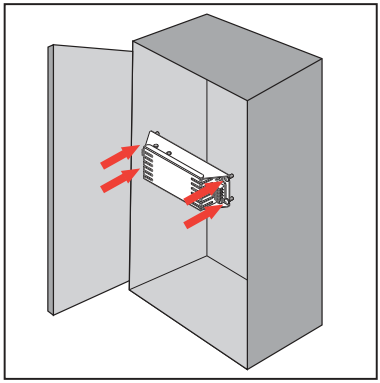

STEP 3

Attach wires to control box by pressing button and inserting wires. Follow wiring diagram.

⚠ CAUTION Always use low voltage 12VAC transformer in between controller and Brilliant Wonders Smart Sync Box.

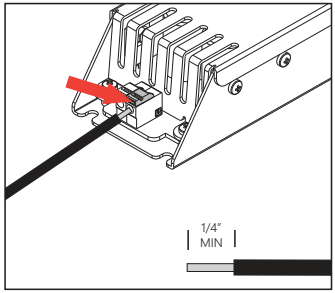

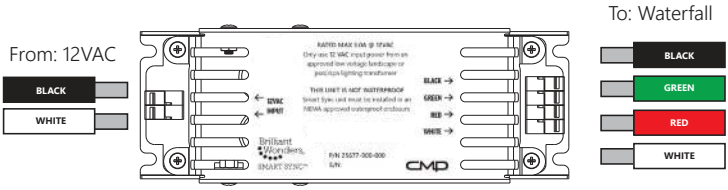

STEP 4 (60W 25677-950-000 MODEL ONLY)

Adjust brightness using dimmer dial. Eight brightness settings from 0-7, with "7" being the brightest setting.

J-STYLE SYNC INSTRUCTIONS

To operate the light and change colors:

Turn the light ON. The first time the light is turned on, the color sequence will begin with Alpine White. To change color, turn light OFF then back ON within three (3) seconds. Continue turning OFF and ON until the desired light color mode is reached.

When the light is turned off for more than seven (7) seconds, it will remain in the color mode that was currently active when the light was turned off.

To RESET the light to the beginning color sequence (Alpine White), turn the light OFF, wait four (4) to six (6) seconds, then turn the light ON.

H-STYLE SYNC INSTRUCTIONS

To operate the light and change colors:

The H-Style lights are operated through power-cycling; a method of changing modes which requires no special controller or interface. To activate the lights simply turn the power switch ON. To advance to the next programmed light mode, turn the switch OFF then back ON within ten (10) seconds. Whenever the lights have been off for more than sixty (60) seconds, and it is first turned on, they will come on white for 15 seconds, then go back to the last programmed light mode it was running before being powered off.

To sync the light with additional H-STYLE lights:

The H-Style lights can easily be synced with additional H-Style lights. All lights should be wired to the same switch, this should automatically sync the lights. If the lights get out of sync on the same switch: turn the switch OFF, then wait between eleven (11) and fourteen (14) seconds and turn the switch back ON. When the lights come back on, they should enter program mode number one (1) and be synchronized.

P-STYLE COLOR SELECTION AND SYNC INSTRUCTIONS

To operate the light and change colors:

The P-Style lights can be controlled using a standard wall-mount light switch. Multiple lights can be connected via a junction box to a single switch so that all lights can be switched ON and OFF together. “P” Style Lights are controlled by cycling the AC power from a standard wall switch. By turning the switch ON and OFF a specific number of times, the light activates one of the seven (7) light show modes, fixed colors, and enables the “Hold” and “Recall” feature.

No special sync instructions are required for P-Style lights. The lights will re-sync automatically each time they are powered on.
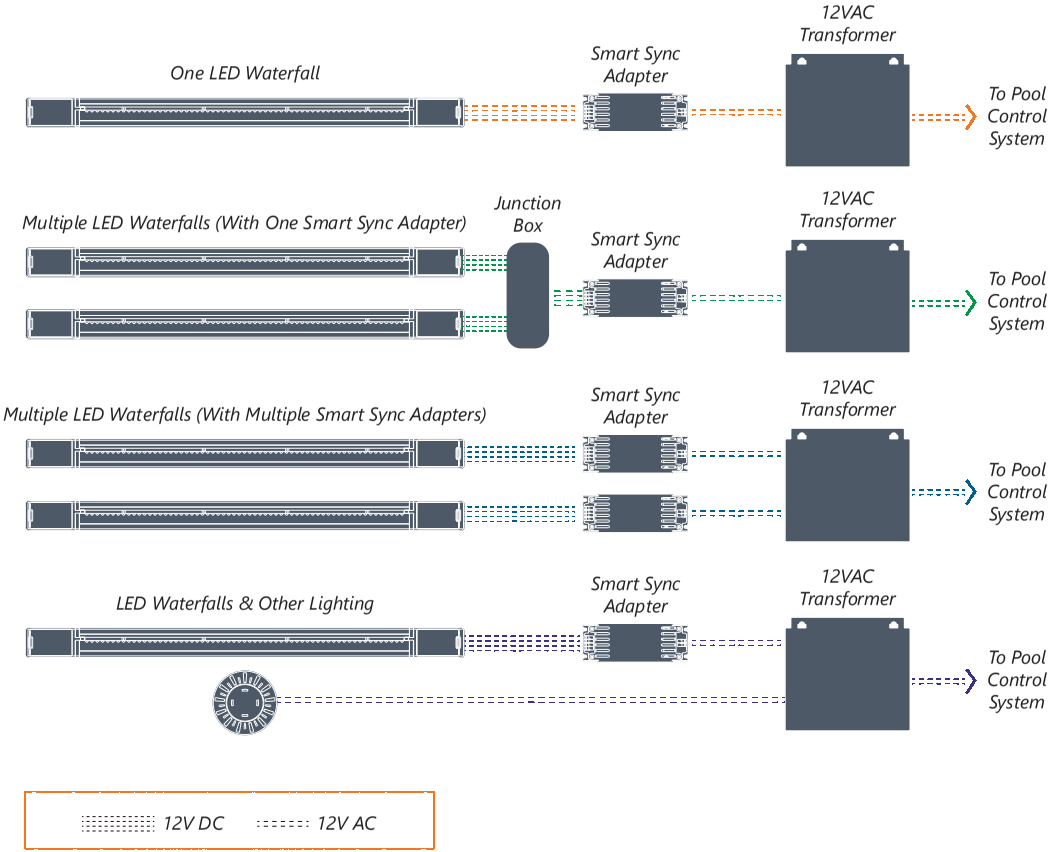
System Wiring Examples