CRYSTORAMA

LIGHTING THE WAY FOR SIXTY YEARS

ASSEMBLY INSTRUCTION MODEL #1488-HB-CL-MWP

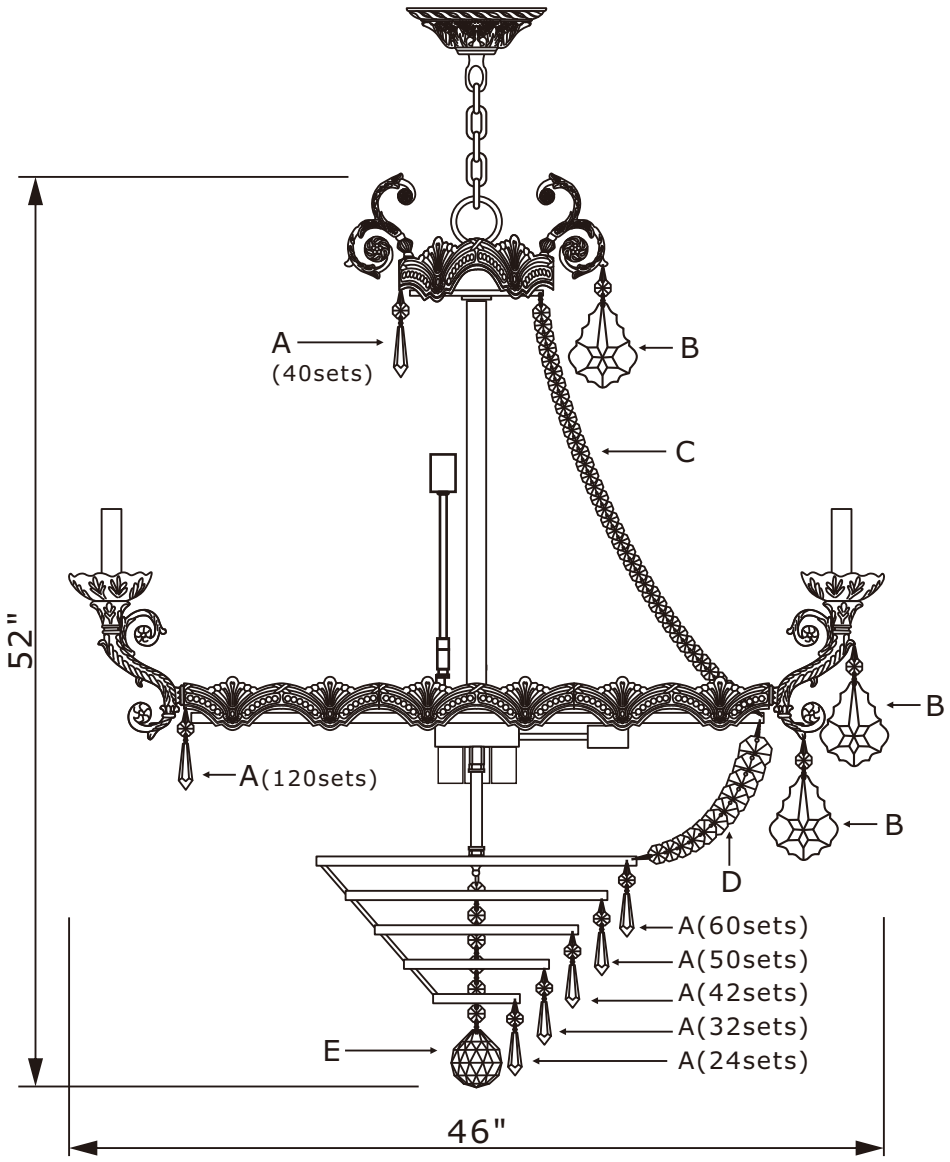

All electrical components must be installed by a licensed electrician in accordance with the National Electric Code and the appropriate local electrical codes.

C UL US LISTED

You will need 20 -Candelabra Base Bulb

40 Watts recommended 40Watts Max.

USE LED BULBS FOR EXTENDED USE

The fixture is dry rated.

How to Install

1. Do a complete inventory of all parts and components before you start installing.
2. After safely attaching fixture into outlet box, install bobeches, bulbs and proceed to connecting the power.
3. When you begin to dress the fixture, start with pocket labeled(A)
4. IMPORTANT: Apply crystal sets in alphabetical order.

Crystal Sets

A. 368 Sets.	(1)14mm + AS2-1.5"
B. 24 Sets.	(1)14mm + AS20-3"
C. 40 Sets.	(38)14mm
D. 80 Sets.	(2)28mm + (2)26mm + (2)24mm + (2)20mm + (2)18mm + (1)16mm
E. 1 Piece.	(6)14mm + AS8-40mm Ball

DETAILED ILLUSTRATION

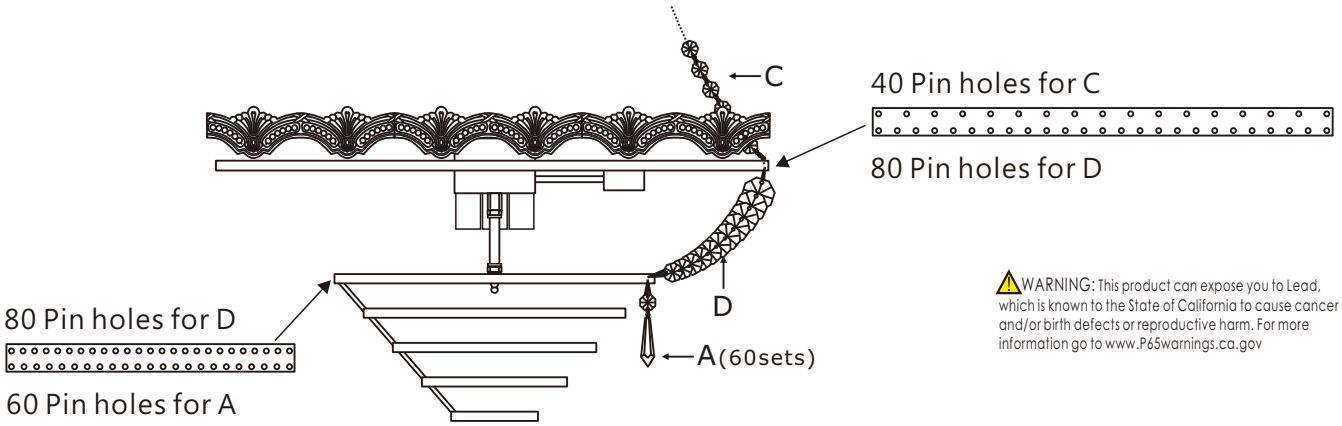

WARNING: This product can expose you to Lead, which is known to the State of California to cause cancer and/or birth defects or reproductive harm. For more information go to www.P65warnings.ca.gov

CRYSTORAMA

LIGHTING THE WAY FOR SIXTY YEARS

PART NUMBER MODEL #1488-HB-CL-MWP

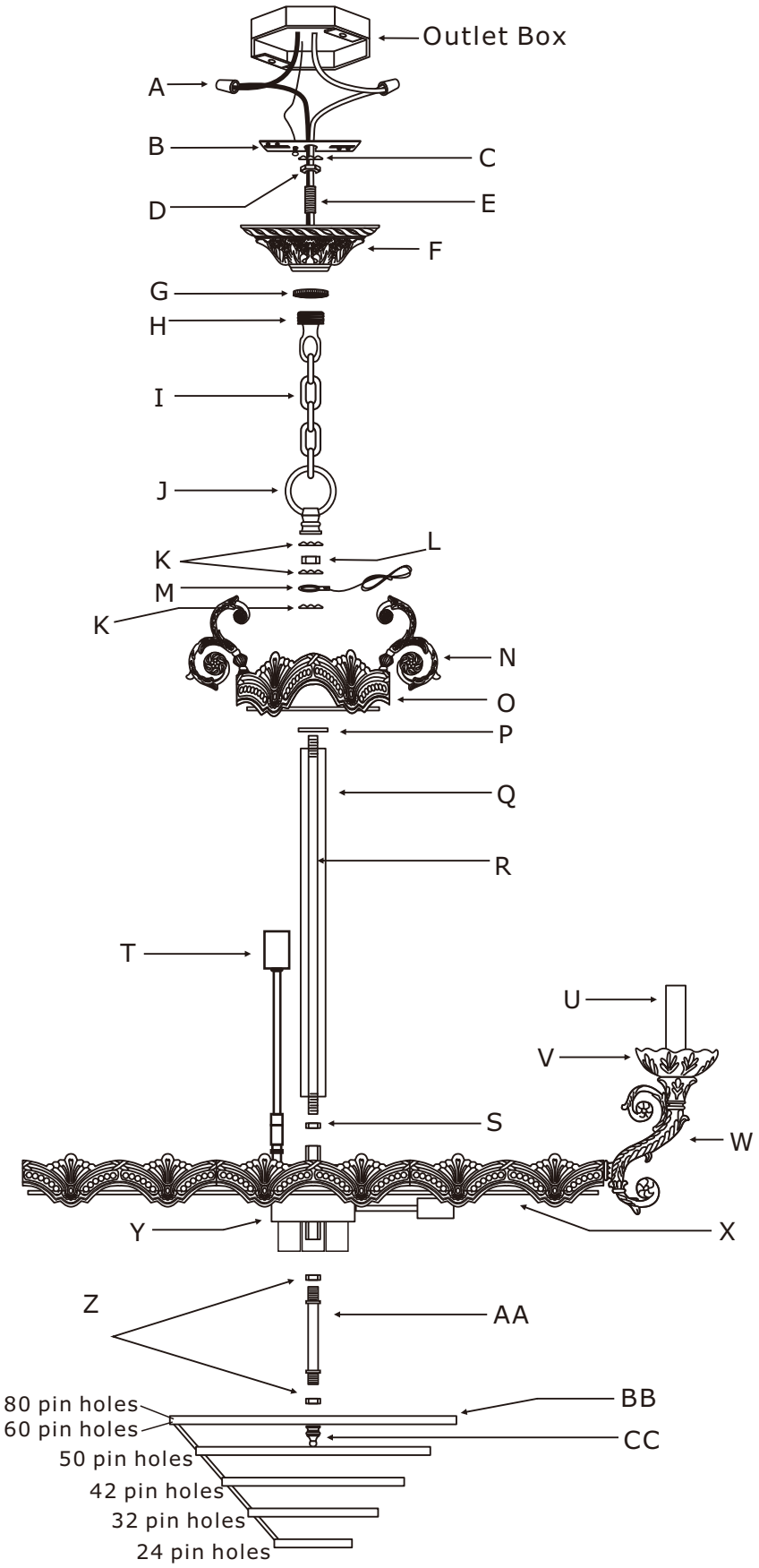

Part Number

Part Numbers

A. (2)-Wire Connector

B. (1)-Mounting Bar

C. (1)-Lock Washer

D. (1)-Hex Nut

E. (1)-Thread

F. (1)-Canopy (W5"xH1.75")
-XSN1483CAN5IN

G. (1)-Collar Ring

H. (1)-Collar Loop

J. (1)-Loop

I. (1)-Chain (5mmx72")
-XSN1488HBCHA5MM

L. (1)-Nut

K. (3)-Washer

M. (1)-Ground Wire

N. (8)-Scroll

O. (1)-Top Banding Kit
Decorative banding;40 pin holes
Inside metal ring;40 pin holes

P. (1)-Check Ring

Q. (1)-ROD;H28"
-XSN1488HBROD28IN

R. (1)-Thread;H28 1/8"

S. (1)-Nut

T. (1)-Movable Socket kit;
H1 3/4"Thread with socket,
H5.5"Thread with socket,
H7.5"Thread with socket,
H11 3/8"Thread with socket.

U. (8)-Candle Sleeve;H4"

V. (8)-Bobeche;Ø5",No pin,28mm hole
-XSN1486HBBOB5IN

W. (8)-Arms

X. (1)-Main Banding Kit
Decorative banding,120pin holes
Inside metal ring,40+80 pin holes

Y. (1)-Center Junction Kit
4"Junction box,5 side sockets;
3 Bottom sockets.

Z. (2)-Nut

AA. (1)-Thread;H4.5"

BB. (1)-5-Tier basket;Ø13",H6"
(80+60)+50+42+32+24 pin holes

CC. (1)-Finial-XSN1483HBFIN