TX-BT 31-95 PFP
Removal Drill Bit X-BT

2398300-07.2023

Hilti Corrosion handbook / DFTM

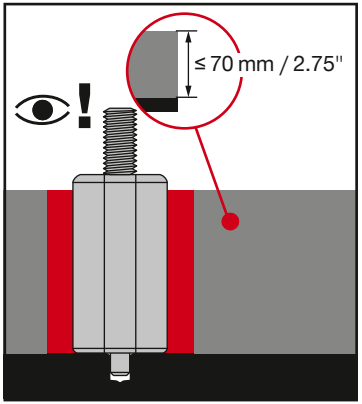

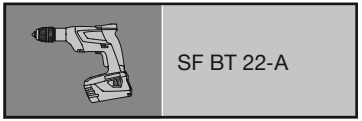

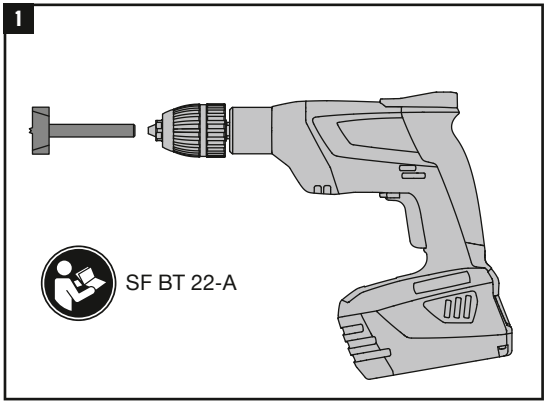

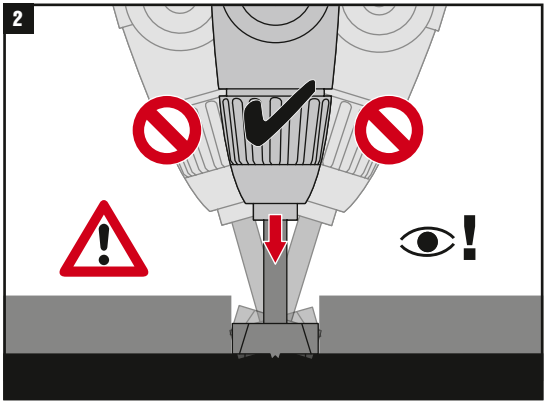

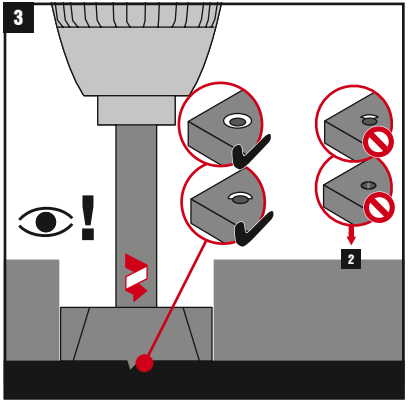

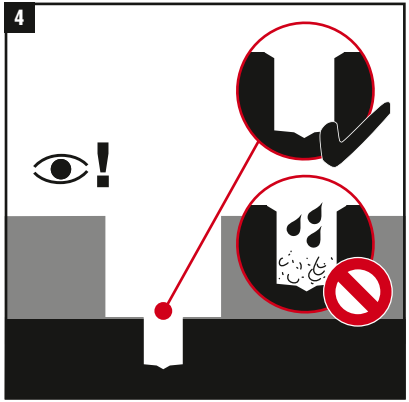

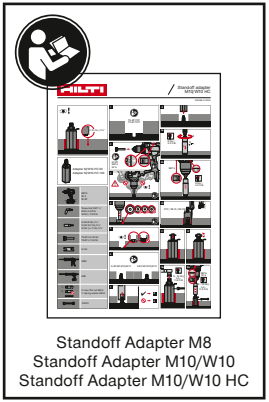

Standoff Adapter M8
Standoff Adapter M10/W10
Standoff Adapter M10/W10 HC