Char-Broil® Grilling's Juicy Little Secret™ TRU INFRARED™

PRODUCT GUIDE
GUIDE DES PRODUITS
GUÍA DEL PRODUCTO

MODEL | MODÈLE | MODELO
463675016

Professional 2-Burner Gas Grill

Serial number | Numéro de série | Número de serie

See rating Label on grill for serial number.

Ce numéro se trouve sur l´étiquette signalétique sur i´appareil.

El número de serie se encuentra en la etiqueta de especificaciones de la parrilla.

Date purchased | Date d'chat | Fecha de compra

If you have questions or need assistance during assembly, please call 1-888-430-7870.

Si vous avez des questions ou besoin d´aide pendant l'assemblage, S'il vous plaît appelez 1-888-430-7870

Si tiene alguna pregunta o si Necesita ayuda durante el Ensamblado, llámenos Al 1-888-430-7870

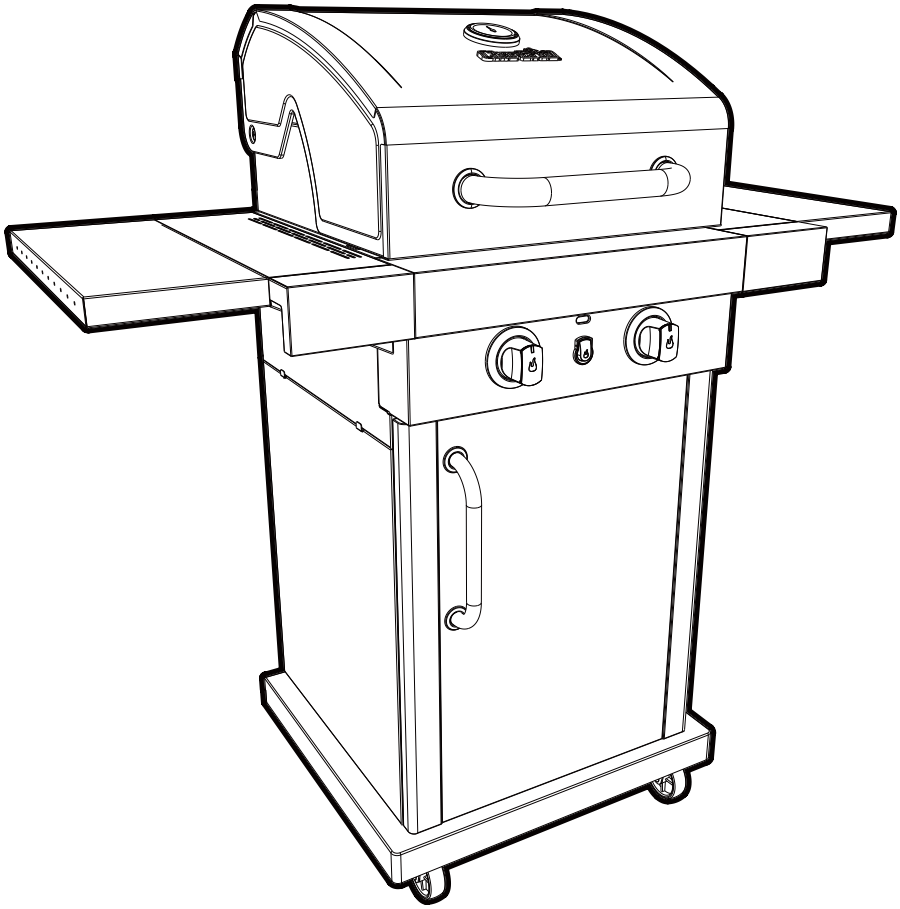

DUAL FUEL™

Easily converts from (LP) liquid propane to (NG) natural gas

Convertit facilement de forme (LP) propane liquide (NG) de gaz naturel

Se convierte fácilmente de propano líquido (LP) a gas natural (NG)

CONVERSION KIT | ENSEMBLE DE CONVERSION | KIT DE CONVERSIÓN
#4584609

05/25/16 • G362-001-200801

TABLE OF CONTENTS

For Your Safety 2-4

Use and Care 4-9

Limited Warranty 10

Assembly 29-39

Troubleshooting 40-41

Parts Diagram 46

Parts List 47

Hardware List 50

Registration Card. 51

INSTALLER/ASSEMBLER:

Leave this manual with consumer.

CONSUMER:

Keep this manual for future reference.

SAFETY SYMBOLS

The symbols and boxes shown below explain what each heading means. Read and follow all of the messages found throughout the manual.

CAUTION

CAUTION: Indicates a potentially hazardous situation or unsafe practice which, if not avoided, may result in minor or moderate injury.

WARNING

WARNING: Indicates a potentially hazardous situation which, if not avoided, could result in death or serious injury.

DANGER

DANGER: Indicates an imminently hazardous situation which, if not avoided, will result in death or serious injury.

Tools needed for assembly:
Adjustable wrench (not provided)
Screwdriver (not provided)
7/16" Combination wrench (not provided)
Caster pin (provided)

CAUTION

For residential use only. Do not use for commercial cooking.

THIS GRILL IS FOR OUTDOOR USE ONLY.

DANGER

If you smell gas:

1. **Shut off gas to the appliance**
2. **Extinguish any open flame.**
3. **Open lid.**
4. **If odor continues, keep away from the appliance and immediately call your gas supplier or your fire department.**

WARNING

1. **Do not store or use gasoline or other flammable liquids or vapors in the vicinity of this or any other appliance.**
2. **An LP cylinder not connected for use shall not be stored in the vicinity of this or any other appliance.**

WARNING

Do not attempt to repair or alter the hose/valve/regulator for any "assumed" defect. Any modification to this assembly will void your warranty and create the risk of a gas leak and fire. Use only authorized replacement parts supplied by manufacturer.

DANGER

If during operation the flames go out (You smell gas or cannot see the flame)

1. **Turn the burner controls ◯ OFF**
2. **Open lid.**
3. **Wait 5 minutes and repeat the lighting procedure.**

If the burner goes out, gas will continue to flow out of the burner and could accidently ignite with risk of injury.

WARNING

Do not cover grates with aluminum foil or any other material. This will block burner ventilation and create a potentially dangerous condition resulting in property damage and/or personal injury.

WARNING

Failure to follow all manufacturer's instructions could result in serious personal injury and/or property damage.

CAUTION

Read and follow all safety statements, assembly instructions, and use and care directions before attempting to assemble and cook.

CAUTION

Some parts may contain sharp edges. Wear protective gloves if necessary.

CAUTION

Grease Fires

- **Putting out grease fires by closing the lid is not possible. Grills are well ventilated for safety reasons.**
- **Do not use water on a grease fire. Personal injury may result. If a grease fire develops, turn knobs and LP tank off.**
- **If grill has not been regularly cleaned, a grease fire can occur that may damage the product. Pay close attention while preheating or burning off food residue to insure that a grease fire does not develop.**
- **The best way to prevent grease fires is regular cleaning of the grill following instructions on General Grill Cleaning and Cleaning The Burner Assembly.**

WARNING

CALIFORNIA PROPOSITION 65

1. Combustible by-products produced when using this product contains chemicals known to the State of California to cause cancer, birth defects, or other reproductive harm.

2. This product contains chemicals, including lead and lead compounds, known to the State of California to cause cancer, birth defects or other reproductive harm.

Wash your hands after handling this product.

CAUTION

Using pots larger than 6 quarts in capacity could exceed weight limit of the side burner shelf or side shelf, resulting in failure of grill cart components.

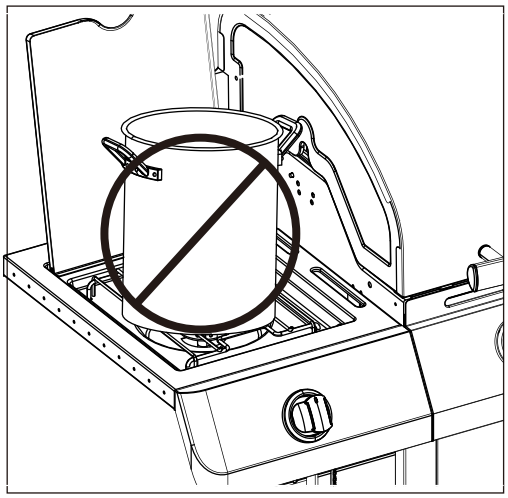

DANGER

- **NEVER store a spare LP cylinder under or near the appliance or in an enclosed area.**

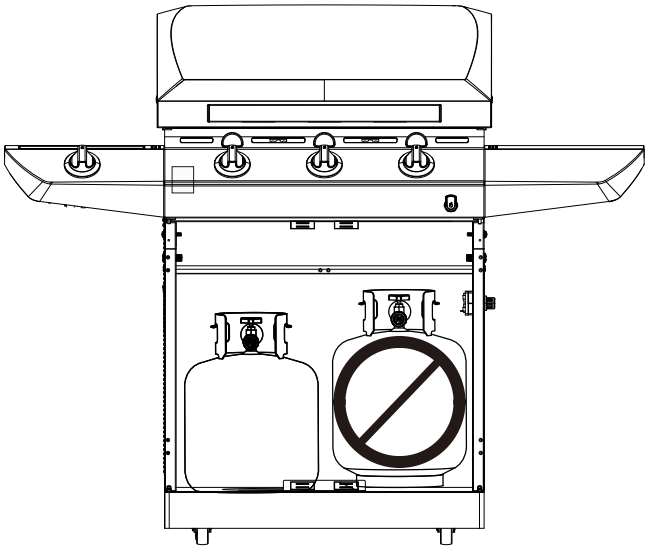

- **Never fill a cylinder beyond 80% full.**
- **An over filled or improperly stored cylinder is a hazard due to possible gas release from the safety relief valve. This could cause an intense fire with risk of property damage, serious injury or death.**
- **If you see, smell or hear gas escaping, immediately get away from the LP cylinder/appliance and call your fire department.**

Installation Safety Precautions

- Use grill, as purchased, only with LP (propane) gas and the regulator/valve assembly supplied. If your grill is Dual Fuel ready, a conversion kit must be purchased for use with natural gas.
- Grill installation must conform with local codes, or in their absence of local codes, with either the *National Fuel Gas Code, ANSI Z223.1/ NFPA 54, Natural Gas and Propane Installation Code, CSA B149.1, or Propane Storage and Handling Code, B149.2.*
- All electrical accessories (such as rotisserie) must be electrically grounded in accordance with local codes, or *National Electrical Code, ANSI / NFPA 70 or Canadian Electrical Code, CSA C22.1.* Keep any electrical cords and/or fuel supply hoses away from any hot surfaces.
- This grill is safety certified for use in the United States and/or Canada only. Do not modify for use in any other location. Modification will result in a safety hazard.

USE AND CARE

LP Cylinder Removal, Transport and Storage

- Turn OFF all control knobs and LP cylinder valve. Turn coupling nut counterclockwise by hand only - do not use tools to disconnect. Loosen cylinder screw beneath bottom shelf or disconnect other retention means, then lift LP cylinder up and and out of cart. Install safety cap onto LP cylinder valve. Always use cap and strap supplied with valve. **Failure to use safety cap as directed may result in serious personal injury and/or property damage.**
- A disconnected LP cylinder in storage or being transported must have a safety cap installed (as shown). Do not store an LP cylinder in enclosed spaces such as a carport, garage, porch, covered patio or other building. Never leave an LP cylinder inside a vehicle which may become overheated by the sun.
- Do not store an LP cylinder in an area where children play.

LP Cylinder Valve

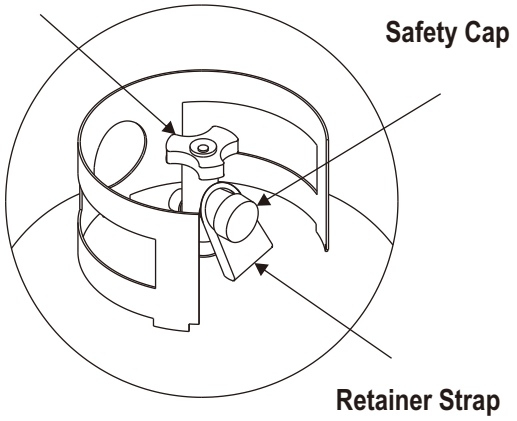

LP Cylinder

- **The LP cylinder used with your grill must meet the following requirements:**
- Use LP cylinders only with these required measurements: 12" (30.5cm) (diameter) x 18" (45.7 cm) (tall) with 20 lb. (9 kg.) capacity maximum.
- LP cylinders must be constructed and marked in accordance with specifications for LP cylinders of the U.S. Department of Transportation (DOT) or for Canada, CAN/CSA-B339, cylinders, spheres and tubes for transportation of dangerous goods, Transport Canada (TC). See LP cylinder collar for marking.
- LP cylinder valve must have:
  - Type 1 outlet compatible with regulator or grill.
  - Safety relief valve.
  - UL listed Overfill Protection Device (OPD). This OPD safety feature is identified by a unique triangular hand wheel. **Use only LP cylinders equipped with this type of valve.**

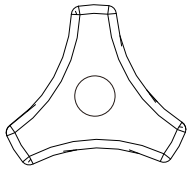

OPD Hand Wheel

- LP cylinder must be upright for vapor withdrawal and include collar to protect LP cylinder valve. Always keep LP cylinders in upright position during use, transit or storage.

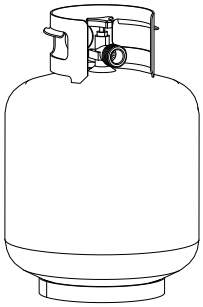

LP cylinder in upright position for vapor withdrawal

LP (Liquefied Petroleum Gas)

- LP gas is nontoxic, odorless and colorless when produced. **For Your Safety**, LP gas has been given an odor (similar to rotten cabbage) so that it can be smelled.
- LP gas is highly flammable and may ignite unexpectedly when mixed with air.

LP Cylinder Filling

- Use only licensed and experienced dealers.
- LP dealer **must purge new cylinder** before filling.
- Dealer should **NEVER** fill LP cylinder more than 80% of LP cylinder volume. Volume of propane in cylinder will vary by temperature.
- A frosty regulator indicates gas overfill. Immediately close LP cylinder valve and call local LP gas dealer for assistance.
- Do not release liquid propane (LP) gas into the atmosphere. This is a hazardous practice.
- To remove gas from LP cylinder, contact an LP dealer or call a local fire department for assistance. Check the telephone directory under “Gas Companies” for nearest certified LP dealers.

LP Cylinder Exchange

•Many retailers that sell grills offer you the option of replacing your empty LP cylinder through an exchange service. Use only those reputable exchange companies that inspect, precision fill, test and certify their cylinders. **Exchange your cylinder only for an OPD safety feature-equipped cylinder as described in the "LP Cylinder" section of this manual.**

•Always keep new and exchanged LP cylinders in upright position during use, transit or storage.

•**Leak test new and exchanged LP cylinders BEFORE connecting to grill.**

•Place safety cap on cylinder valve outlet whenever the cylinder is not in use. Only install the type of safety cap on the cylinder valve outlet that is provided with the cylinder valve. Other types of caps or plugs may result in leakage of propane.

LP Cylinder Leak Test

For your safety

•Leak test must be repeated each time LP cylinder is exchanged or refilled.

•Do not smoke during leak test.

•Do not use an open flame to check for gas leaks.

•Grill must be leak tested outdoors in a well-ventilated area, away from ignition sources such as gas fired or electrical appliances. During leak test, keep grill away from open flames or sparks.

•Use a clean paintbrush and a 50/50 mild soap and water solution. Brush soapy solution onto areas indicated by arrows in figure below.

• **Do not use household cleaning agents.** Damage to gas train components can result.

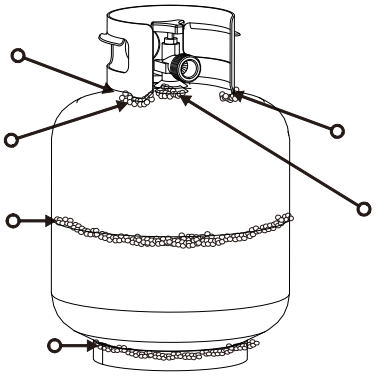

WARNING

If *"growing"* bubbles appear, do not use or move the LP cylinder. Contact an LP gas supplier or your fire department!

Connecting Regulator to the LP Cylinder

1. LP cylinder must be properly secured onto grill. (Refer to assembly section.)

2. Turn all control knobs to the OFF position.

3. Turn LP cylinder OFF by turning hand-wheel clockwise to a **full stop**.

4. Remove the safety cap from LP cylinder valve. Always use cap and strap if supplied with valve.

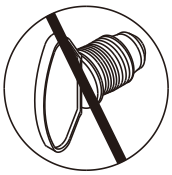

Safety Relief Valve

Do not use a POL transport plug (plastic part with external threads)! It will defeat the safety feature of the valve.

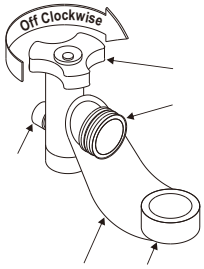

OPD Hand Wheel

Type 1 outlet with thread on outside

Strap and Cap

5. Hold regulator and insert nipple into LP cylinder valve. Hand-tighten the coupling nut, holding regulator in a straight line with LP cylinder valve so as not to cross-thread the connection.

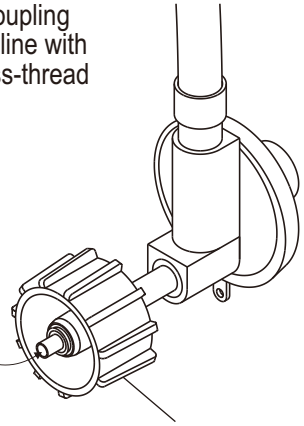

Nipple has to be centered into the LP cylinder valve.

Coupling nut

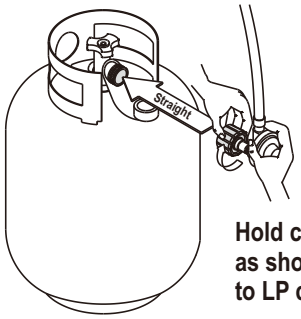

Hold coupling nut and regulator as shown for proper connection to LP cylinder valve.

6. Turn the coupling nut clockwise and tighten to a full stop. The regulator will seal on the back-check feature in the LP cylinder valve, resulting in some resistance. **An additional one-half to three-quarters turn is required to complete the connection. Tighten by hand only – do not use tools.**

NOTE:
If you cannot complete the connection, disconnect regulator and repeat steps 5 and 6. If you are still unable to complete the connection, **do not use this regulator!**

DANGER

• Do not insert any tool or foreign object into the valve outlet or safety relief valve. You may damage the valve and cause a leak. Leaking propane may result in explosion, fire, severe personal injury, or death.

WARNING

- Do not use grill until leak-tested.
- If a leak is detected at any time, STOP! Turn off gas at source and correct leak.
- If you cannot stop a gas leak by closing the LP cylinder valve leave area and call your fire department!

Leak Testing Valves, Hose and Regulator

1.Turn all grill control knobs to OFF.

2.Be sure regulator is tightly connected to LP cylinder.

3.Completely open LP cylinder valve by turning hand wheel counterclockwise. If you hear a *rushing sound*, turn gas off immediately. There is a major leak at the connection. **Correct before proceeding**.

4.Brush soapy solution onto areas circled below, or other similar fittings on your grill.

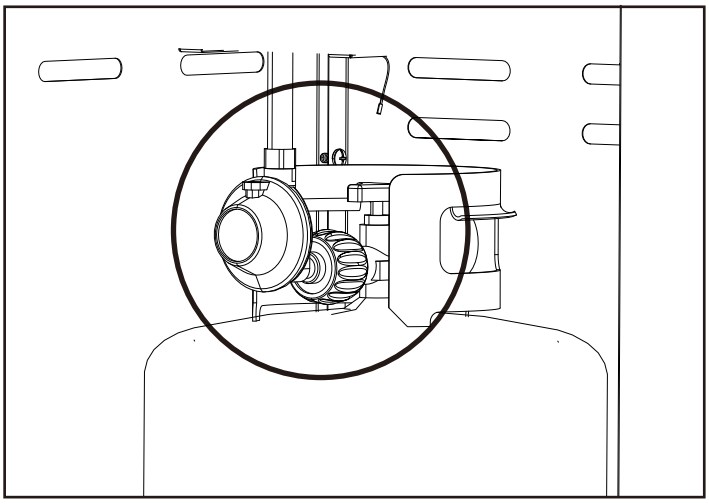

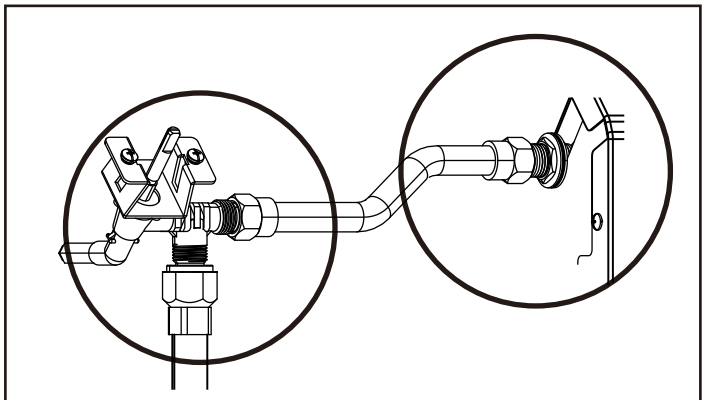

NOTE: Sideburner shelf fascia and other parts not shown for clarity.

NOTE: Your grill may NOT be equipped with a sideburner.

5.If "growing" bubbles appear, there is a leak. Close LP cylinder valve immediately and retighten connections. **If leaks cannot be stopped do not try to repair.** Call for replacement parts.

6.Always close LP cylinder valve after performing leak test by turning hand wheel clockwise.

WARNING

- Outdoor gas appliance is not intended to be installed in or on a boat.
- Outdoor gas appliance is not intended to be installed in or on an RV.
- Never attempt to attach this grill to the self-contained LP gas system of a camper trailer or motor home.

Safety Tips

- Before opening LP cylinder valve, check the coupling nut for tightness.
- When grill is not in use, turn off all control knobs and LP cylinder valve.
- Never move grill while in operation or still hot.
- Some surfaces will be hot during use. Use long-handled barbecue utensils and oven mitts to avoid burns and splatters.
- Maximum load for sideburner and side shelf is 10 lbs.
- The grease tray or cup **must** be installed during use and emptied after each use. Do not remove grease tray or cup until grill has completely cooled.
- Clean grill often, preferably after each cookout. If a bristle brush is used to clean any of the grill cooking surfaces, ensure no loose bristles remain on cooking surfaces prior to grilling. It is not recommended to clean cooking surfaces while grill is hot.
- If you notice grease or other hot material dripping from grill onto valve, hose or regulator, turn off gas supply at once. Determine the cause, correct it, then clean and inspect valve, hose and regulator before continuing. Perform a leak test.
- Keep ventilation openings in cylinder enclosure (grill cart) free and clear of debris.
- Do not store objects or materials inside the grill cart enclosure that would block the flow of combustion air to the underside of either the control panel or the firebox bowl.
- The regulator may make a humming or whistling noise during operation. This will not affect safety or use of grill.
- If you have a grill problem see the *"Troubleshooting"* Section.
- If the regulator frosts, turn off grill and LP cylinder valve immediately. This indicates a problem with the cylinder and it should not be used on any product. Return to supplier!

WARNING

For Safe Use of Your Grill and to Avoid Serious Injury:

- Do not let children operate or play near grill.
- Keep grill area clear and free from materials that burn.
- Do not block holes in sides or back of grill.
- Check burner flames regularly.
- Use grill only in well-ventilated space. NEVER use in enclosed space such as carport, garage, porch, covered patio, or under an overhead structure of any kind.
- Do not use charcoal or ceramic briquets in a gas grill.
- Do not cover grates with aluminum foil or any other material. This will block burner ventilation and create a potentially dangerous condition resulting in property damage and/or personal injury.
- **Use grill at least 3 ft. from any wall or surface.** Maintain 10 ft. clearance to objects that can catch fire or sources of ignition such as pilot lights on water heaters, live electrical appliances, etc.

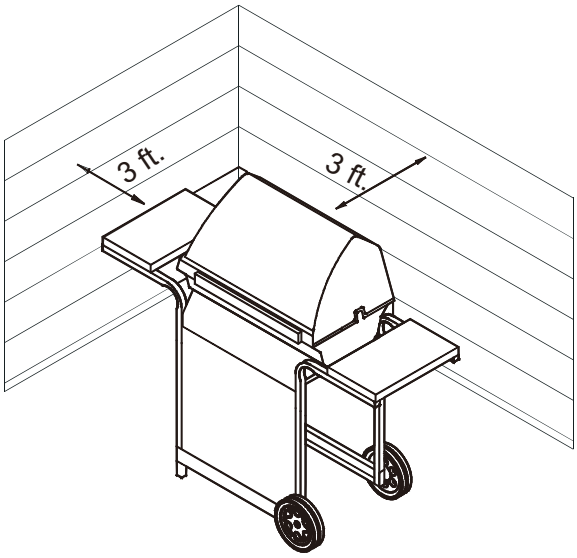

- **NEVER attempt to light or re-light burner with lid closed. A buildup of non-ignited gas inside a closed grill is hazardous.**
- **Never operate grill with LP cylinder out of correct position specified in assembly instructions.**
- **Always close LP cylinder valve and remove coupling nut before moving LP cylinder from specified operation position.**
- **Apartment Dwellers:**

  Check with management to learn the requirements and fire codes for using an LP gas grill in your apartment complex. If allowed, use outside on the ground floor with a three (3) foot clearance from walls or rails. Do not use on or under balconies.

Ignitor Lighting

- **Do not lean over grill while lighting.**

1. Turn gas burner control valves to ○ (off).
2. Open lid during lighting or re-lighting.
3. Turn ON gas at LP cylinder.
4. To ignite, push and turn burner knob to HIGH. Immediately, push and hold ELECTRONIC IGNITOR button until the burner lights.
5. If ignition does NOT occur in 5 seconds, turn the burner controls off ○, wait 5 minutes and repeat the lighting procedure.
6. Repeat steps 4 and 5 to light other main burners.

WARNING

Turn controls and gas source or tank OFF when not in use.

CAUTION

If ignition does NOT occur in 5 seconds, turn the burner controls ○ off, wait 5 minutes and repeat the lighting procedure. If the burner does not ignite with the valve open, gas will continue to flow out of the burner and could accidently ignite with risk of injury.

Match-Lighting

- **Do not lean over grill while lighting.**

1. Turn gas burner control valves to ○ (off).
2. Open lid during lighting or re-lighting.
3. Turn ON gas at LP cylinder.
4. Place match into match holder (hanging from side panel of grill). Light match; then light burner by placing match through the match light hole on side of grill. Immediately push in and turn burner knob to the HIGH position. Be sure burner lights and stays lit.
5. Light adjacent burners in sequence by pushing knobs in and turning to the HIGH position.

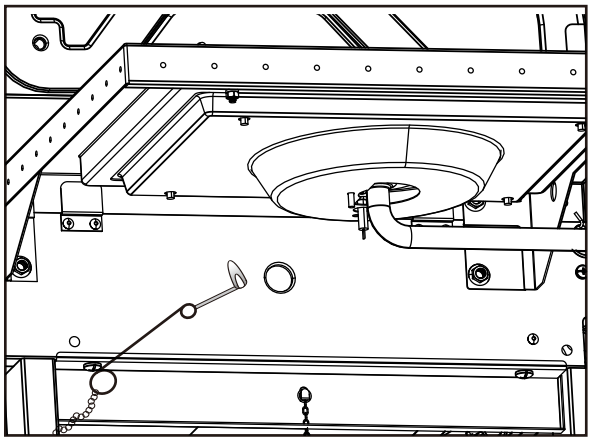

Burner Flame Check

- Remove cooking grates and heat tents. Light burners, rotate knobs from HIGH to LOW. You should see a smaller flame in LOW position than seen on HIGH. Perform burner flame check on side burner, also. Always check flame prior to each use. If only low flame is seen refer to "Sudden drop or low flame" in the *Troubleshooting* Section.

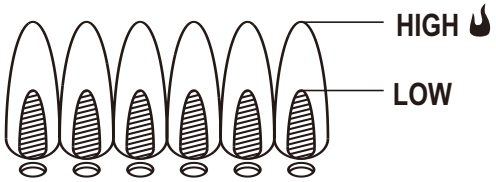

Turning Grill Off

- Turn all knobs to the ○ off position. Turn LP cylinder off by turning hand-wheel clockwise to a full stop.

Ignitor Check

- **Turn gas off at LP cylinder.** Press and hold electronic ignitor button. "Click" should be heard and spark seen each time in each collector box or between burner and electrode. See *"Troubleshooting"* if no click or spark.

Valve Check

- **Important: Make sure gas is off at LP cylinder before checking valves**. Knobs lock in off position. To check valves, first push in knobs and release, knobs should spring back. If knobs do not spring back, replace valve assembly before using grill. Turn knobs to LOW position then turn back to off position. Valves should turn smoothly.

Hose Check

- Before each use, check to see if hoses are cut or worn or kinked. Replace damaged hoses before using grill. Use only valve/hose/regulator specified by manufacturer.

Storing Your Grill

- Clean cooking grates.
- Store in dry location.
- When LP cylinder is connected to grill, store outdoors in a well-ventilated space and out of reach of children.
- Cover grill if stored outdoors. Choose from a variety of grill covers offered by manufacturers.
- Store grill indoors ONLY if LP cylinder is turned off and disconnected, removed from grill and stored outdoors.
- When removing grill from storage, follow "*Cleaning the Burner Assembly*" instructions before starting grill.

CAUTION

SPIDER ALERT!

SPIDER AND WEBS INSIDE BURNER

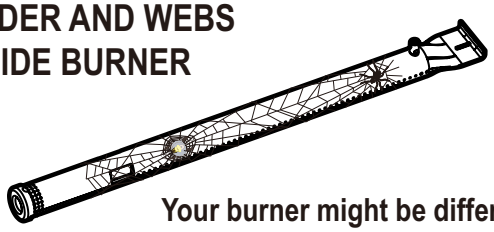

Your burner might be different

If your grill is getting hard to light or the flame is weak, check and clean the venturis and burners.

Spiders or small insects are known to create "flashback" problems by building nests and laying eggs in the grill's venturi or burner, obstructing the flow of gas. The back-up gas can ignite behind the control panel. This flashback can damage your grill and cause injury. To prevent flashbacks and ensure good performance the burner and venturi tube assembly should be removed and cleaned when ever the grill has been idle for an extended period of time.

General Grill Cleaning

- Do not mistake brown or black accumulation of grease and smoke for paint. Interiors of gas grills are not painted at the factory **(and should never be painted)**. Apply a strong solution of detergent and water or use a grill cleaner with scrub brush on insides of grill lid and bottom. Rinse and allow to completely air dry. **Do not apply a caustic grill/oven cleaner to painted surfaces.**
- **Plastic parts:** Wash with warm soapy water and wipe dry.
  - Do not use citrisol, abrasive cleaners, degreasers or a concentrated grill cleaner on plastic parts. Damage to and failure of parts can result.
- **Porcelain surfaces:** Because of glass-like composition, most residue can be wiped away with baking soda/water solution or specially formulated cleaner. Use nonabrasive scouring powder for stubborn stains.
- **Painted surfaces:** Wash with mild detergent or nonabrasive cleaner and warm soapy water. Wipe dry with a soft nonabrasive cloth.
- **Stainless steel surfaces:** To maintain your grill's high quality appearance, wash with mild detergent and warm soapy water and wipe dry with a soft cloth after each use. Baked-on grease deposits may require the use of an abrasive plastic cleaning pad. Use only in direction of brushed finish to avoid damage. Do not use abrasive pad on areas with graphics.
- **Cooking surfaces:** If a bristle brush is used to clean any of the grill cooking surfaces, ensure no loose bristles remain on cooking surfaces prior to grilling. It is NOT recommended to clean cooking surfaces while grill is hot.

Cleaning the Burner Assembly

Follow these instructions to clean and/or replace parts of burner assembly or if you have trouble igniting grill.

1. **Turn gas off at control knobs and LP cylinder.**
2. Remove cooking grates and heat tents.
3. Remove carryover tubes and hardware securing burners.
4. Detach electrode from burner.
   NOTE: Removal/Detachment method will depend on the burner configuration. See different configurations in illustrations below.
5. Carefully lift each burner up and away from valve openings.
   We suggest three ways to clean the burner tubes. Use the one easiest for you.
   (A) Bend a stiff wire (a light weight coat hanger works well) into a small hook. Run the hook through each burner tube several times.

   (B) Use a narrow bottle brush with a flexible handle (do not use a brass wire brush). Run the brush through each burner tube several times.
   (C) Wear eye protection: Use an air hose to force air into the burner tube and out the burner ports. Check each port to make sure air comes out each hole.
6. Wire brush entire outer surface of burner to remove food residue and dirt.
7. Clean any blocked ports with a stiff wire such as an open paper clip.
8. Check burner for damage due to normal wear and corrosion, some holes may become enlarged. If any large cracks or holes are found, replace burner.

VERY IMPORTANT: Burner tubes must reengage valve openings. See illustrations at right.

Correct burner-to-valve engagement

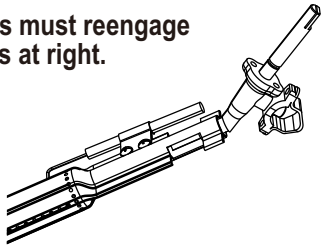

9. Attach electrode to burner.
10. Carefully replace burners.
11. Attach burners to brackets on firebox.
12. Reposition carryover tubes and attach to burners. Replace heat tents and cooking grates.
13. Before cooking again on grill, perform a *"Leak Test"* and *"Burner Flame Check"*.

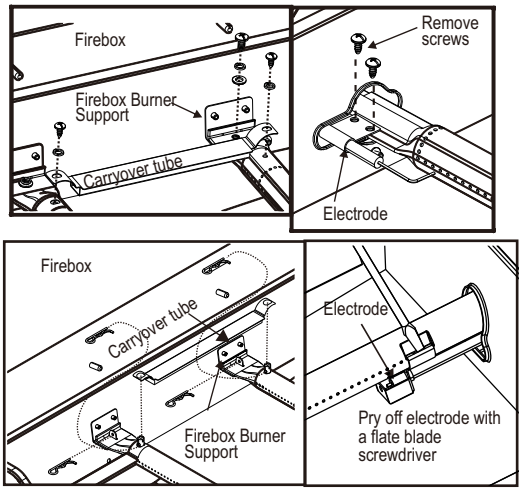

ASSEMBLY/ ASSEMBLAGE/ ARMADO

NOTE: DO NOT over tighten screws and washers that come into contact with porcelain coated surfaces. Over tightening may cause the porcelain coating to crack and break, resulting in exposed metal that will be prone to rust.

REMARQUE: NE serrez PAS excessivement les vis et les rondelles qui sont en contact avec les surfaces au revêtement en porcelaine. Un serrage excessif peut fissurer ou briser le revêtement en porcelaine, entraînant l'exposition du métal qui pourrait rouiller.

NOTA: NO apriete demasiado los tornillos y arandelas que entren en contacto con las superficies revestidas de porcelana. Si los aprieta demasiado, se puede quebrar y romper el revestimiento de porcelana lo que dejará expuesto el metal al proceso de oxidación.

1

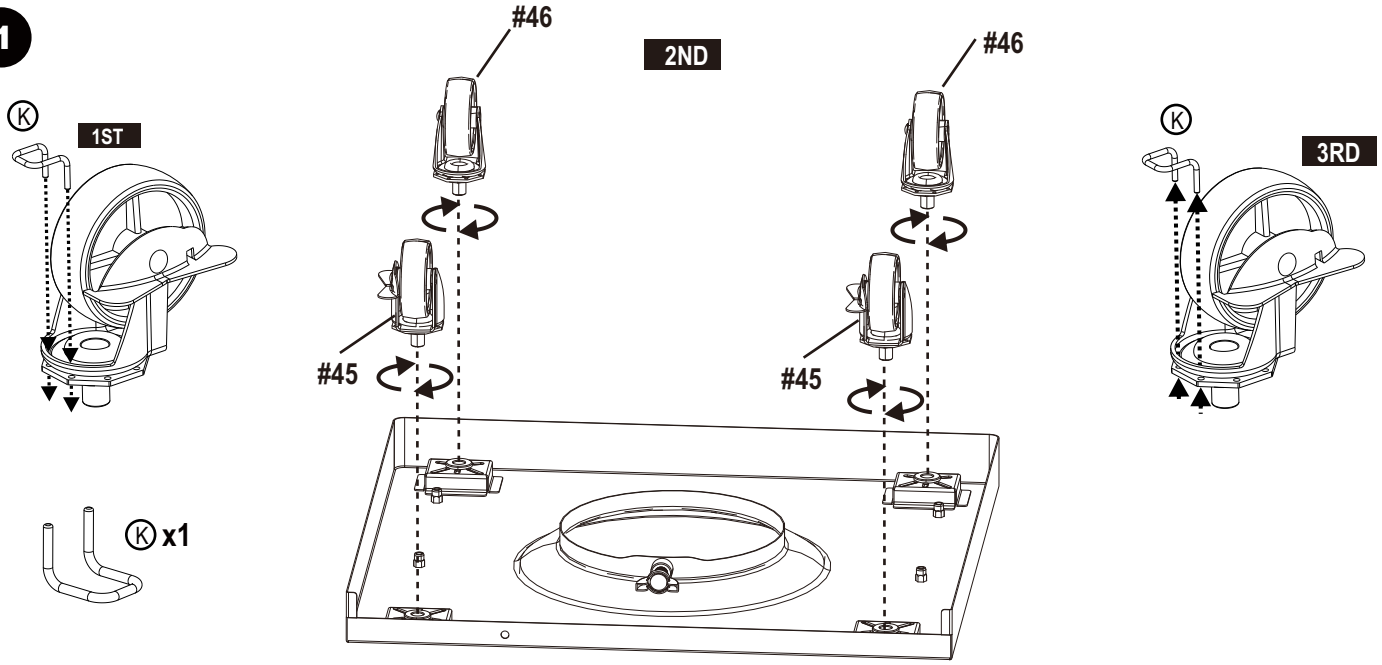

After all 4 casters are secure remove the Caster Pin and save for future maintenance.
Après avoir fixé les quatre roulettes, enlevez la dispositif de blocage pour roulette et conservez-la pour toute réparation future.
Una vez debidamente instaladas las cuatro ruedas, retire la clavija para la rueda y guárdela para emplearla en el futuro, cuando deba dar servicio de mantenimiento al aparato.

2

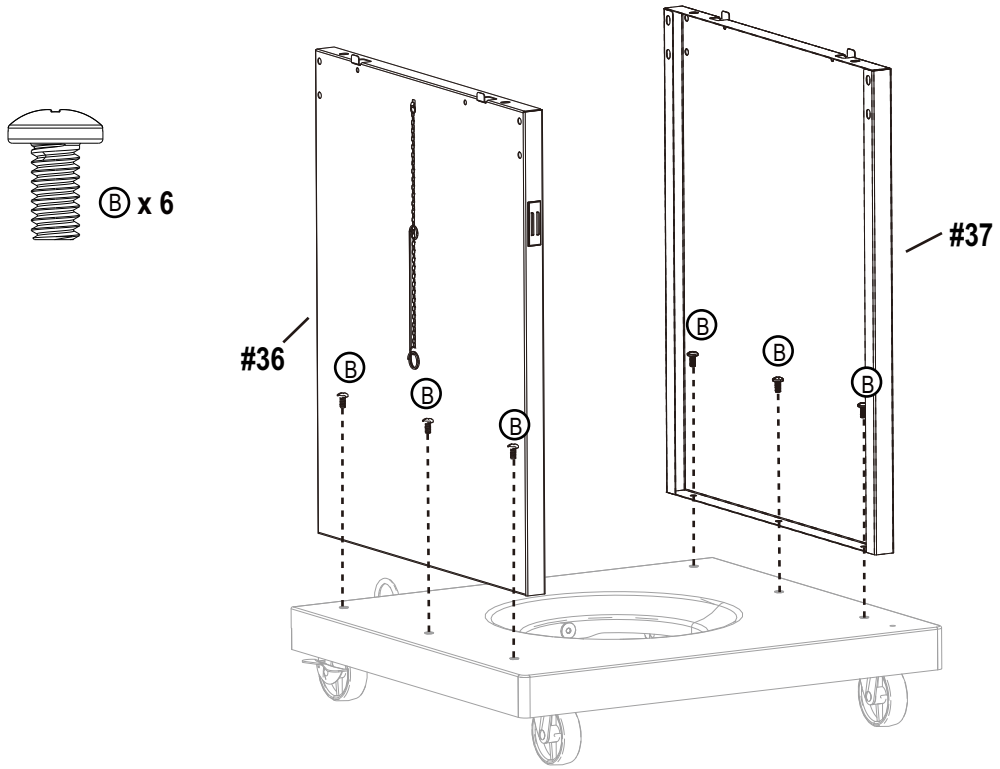

3

Ⓖ x6

1ST

#42

#44

2ND

Ⓖ

Ⓖ

THIS SIDE UP
CE CÔTÉ VERS LE HAUT
ESTE LADO HACIA ARRIBA

3RD

Ⓖ

Ⓖ

Ⓖ

Ⓖ

4

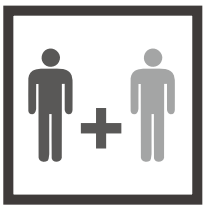

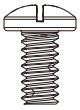

Ⓑ x4

#10

Note: remove the tie wraps
Remarque: retirez l'attache de câble
Nota: retire los cordones de amarre

Tie wrap
Attache
Cordón de amarre

Ⓑ

Ⓑ

Ⓑ

Ⓑ

5

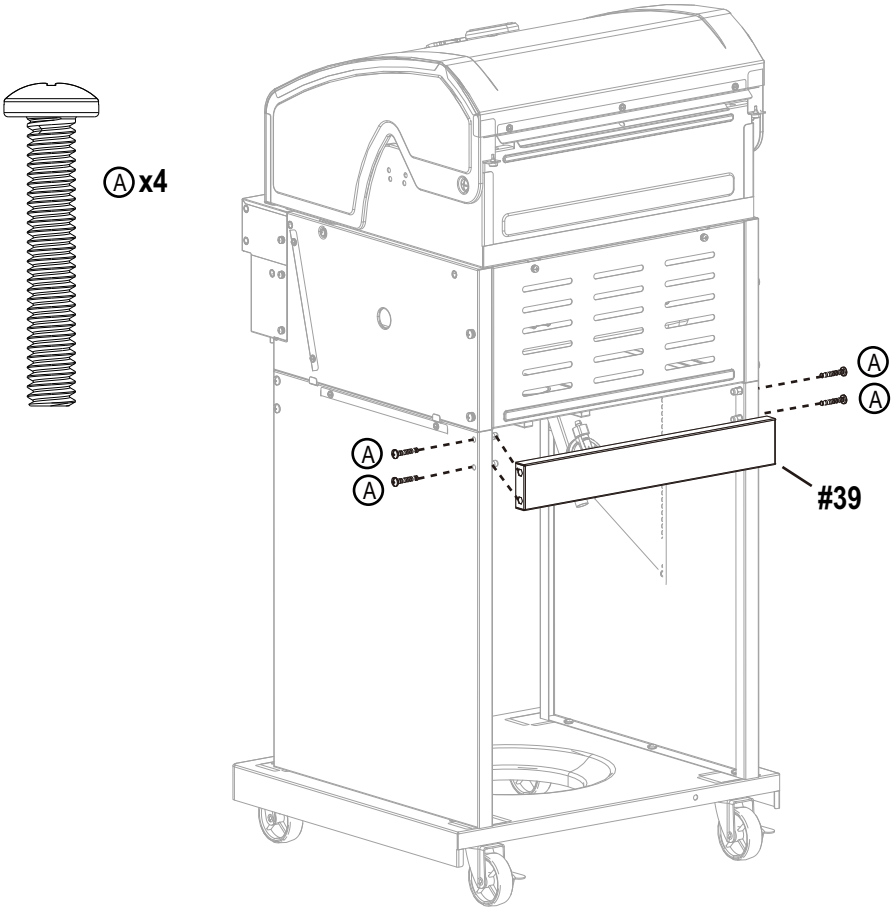

6

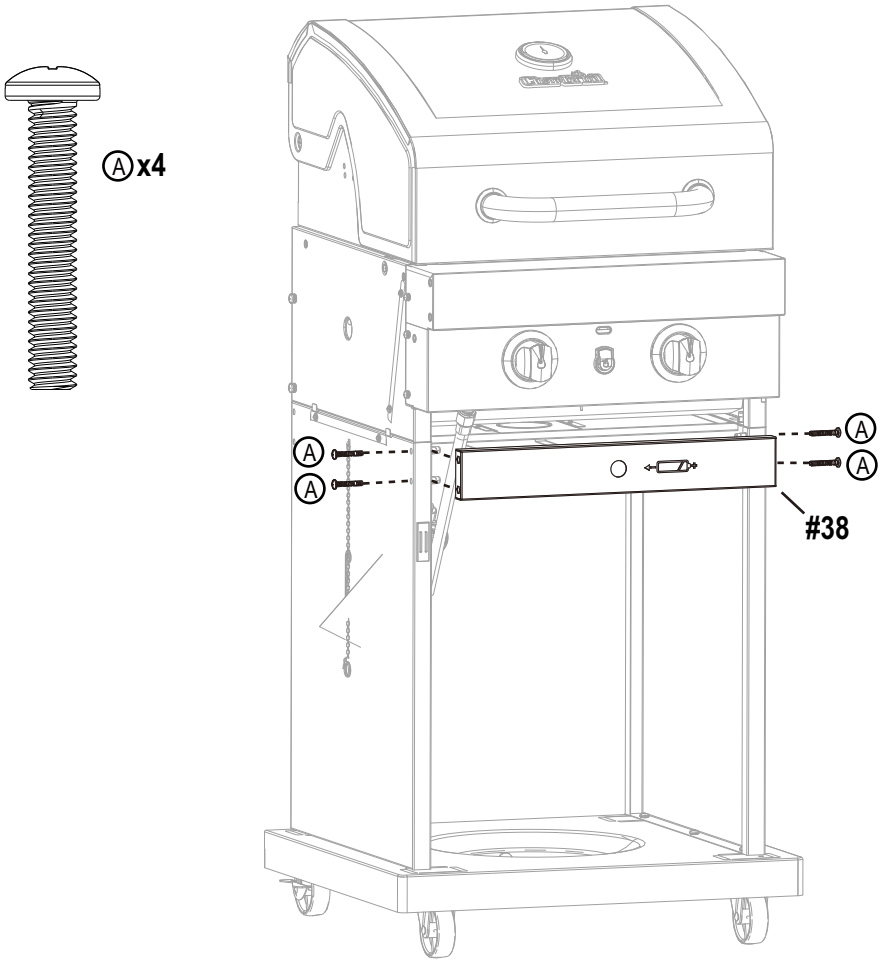

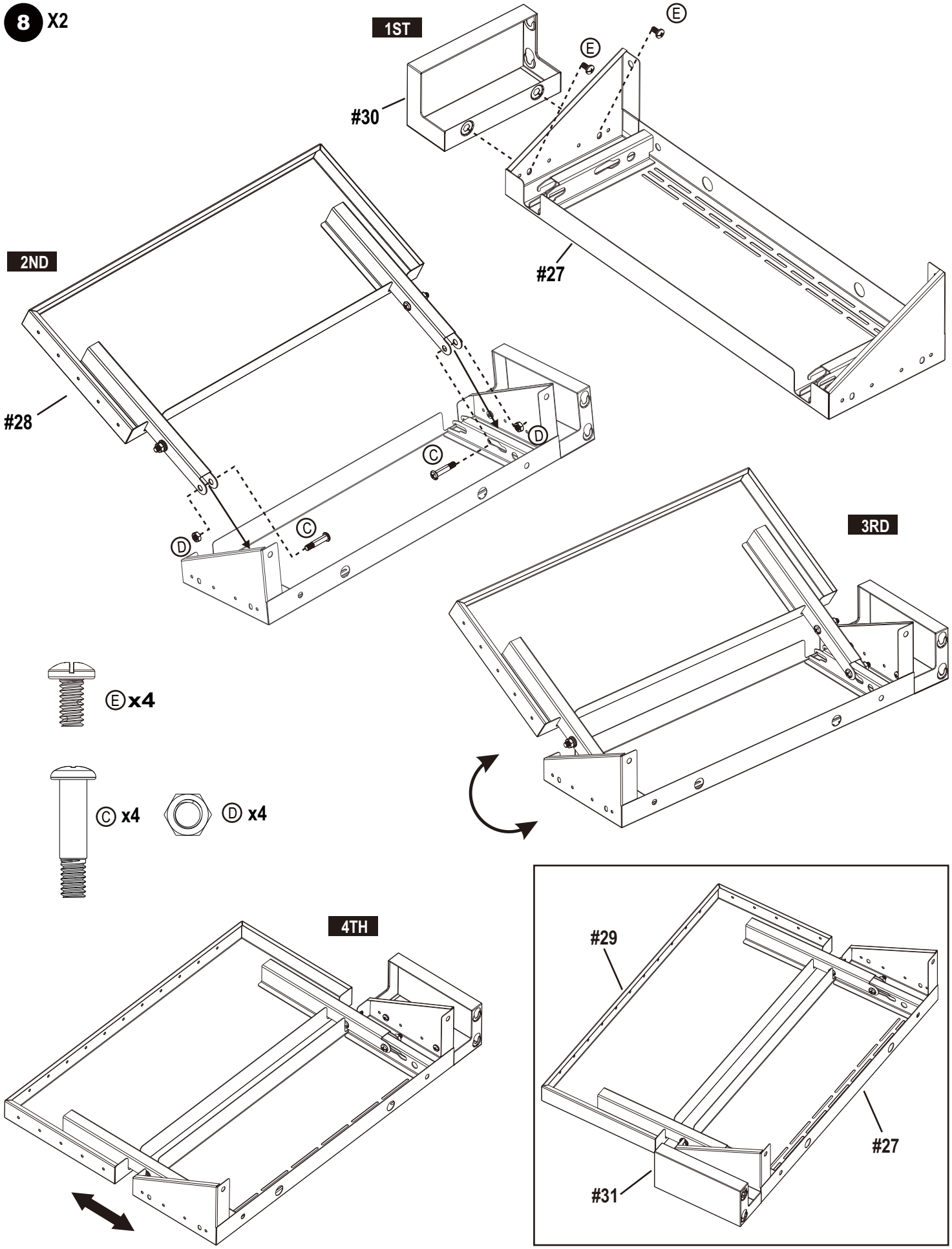
8 X2
1ST
#30
E
E
#27
2ND
#28
C
D
C
D
3RD
E x4
C x4
D x4
4TH
#29
#27
#31

9 X2

Ⓑ x4

Remove and reuse in next step
Enlevez et réemploi dans l'étape suivante
Retire y vuelva a usar en el siguiente paso

10 X2

Ⓑ x6

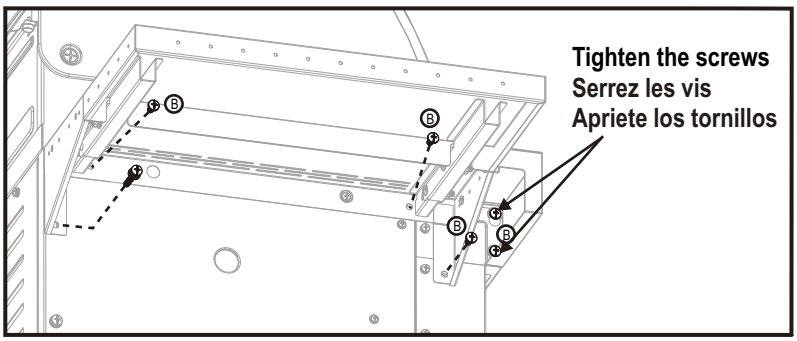

11

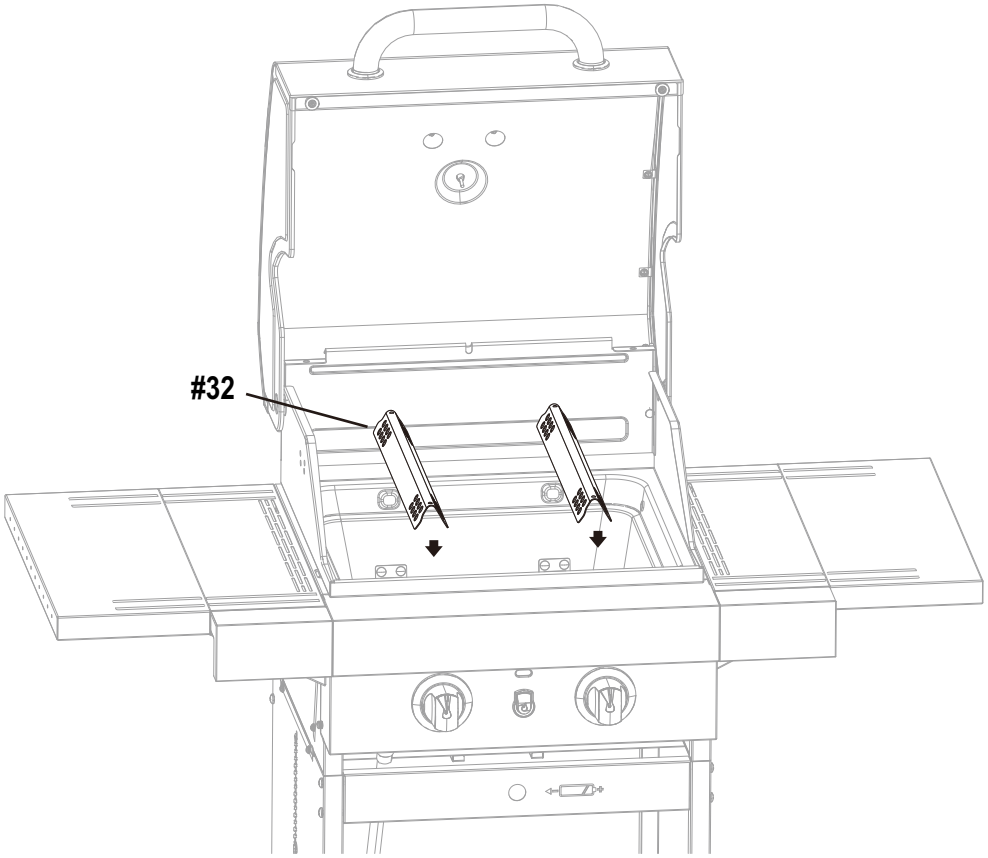

12

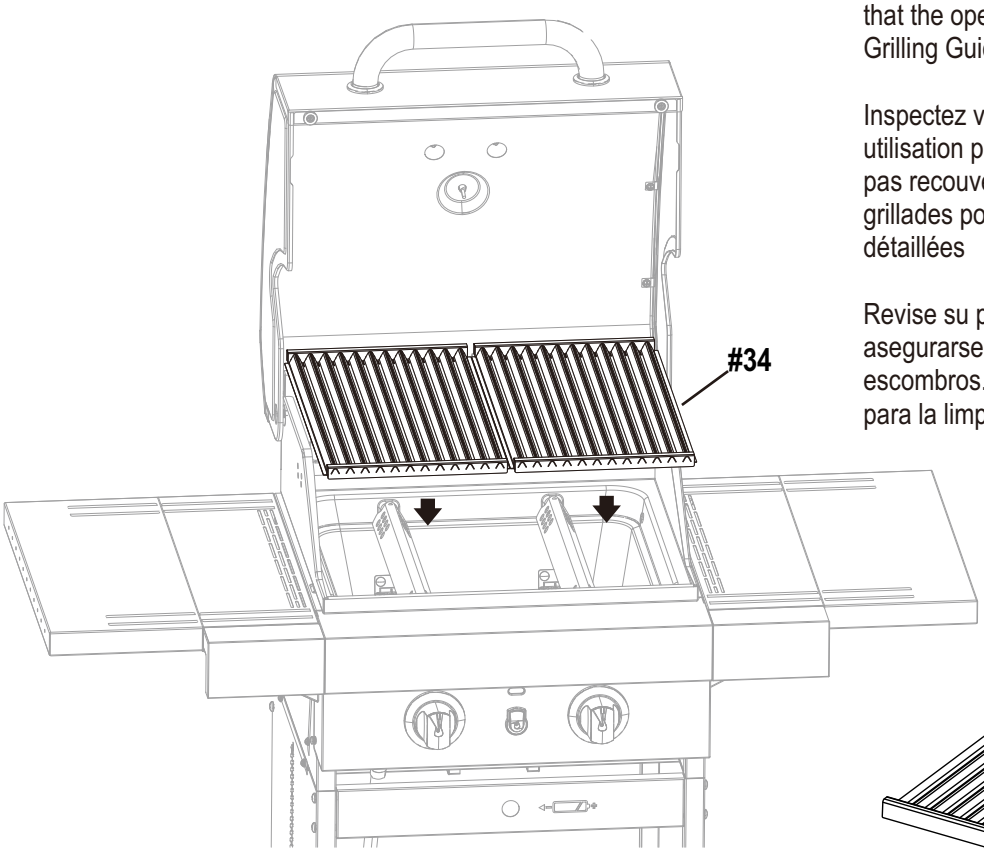

Inspect your infrared grate before each use to ensure that the openings are not covered with debris. See the Grilling Guide for detailed cleaning instructions.

Inspectez votre grille infrarouge avant chaque utilisation pour vous assurer que les orifices ne sont pas recouverts de débris. Reportez-vous au guide des grillades pour connaître les consignes de nettoyage détaillées

Revise su parrilla infrarroja antes de cada uso para asegurarse que las aberturas no están cubiertas de escombros. Consulte la Guía de Asado a la Parilla para la limpieza detallada.

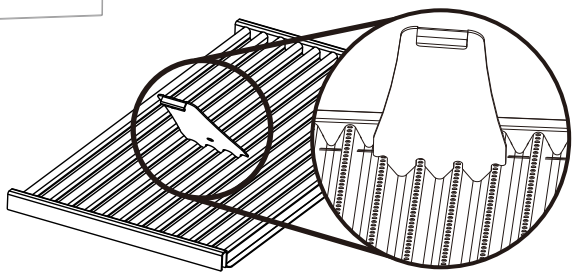

13

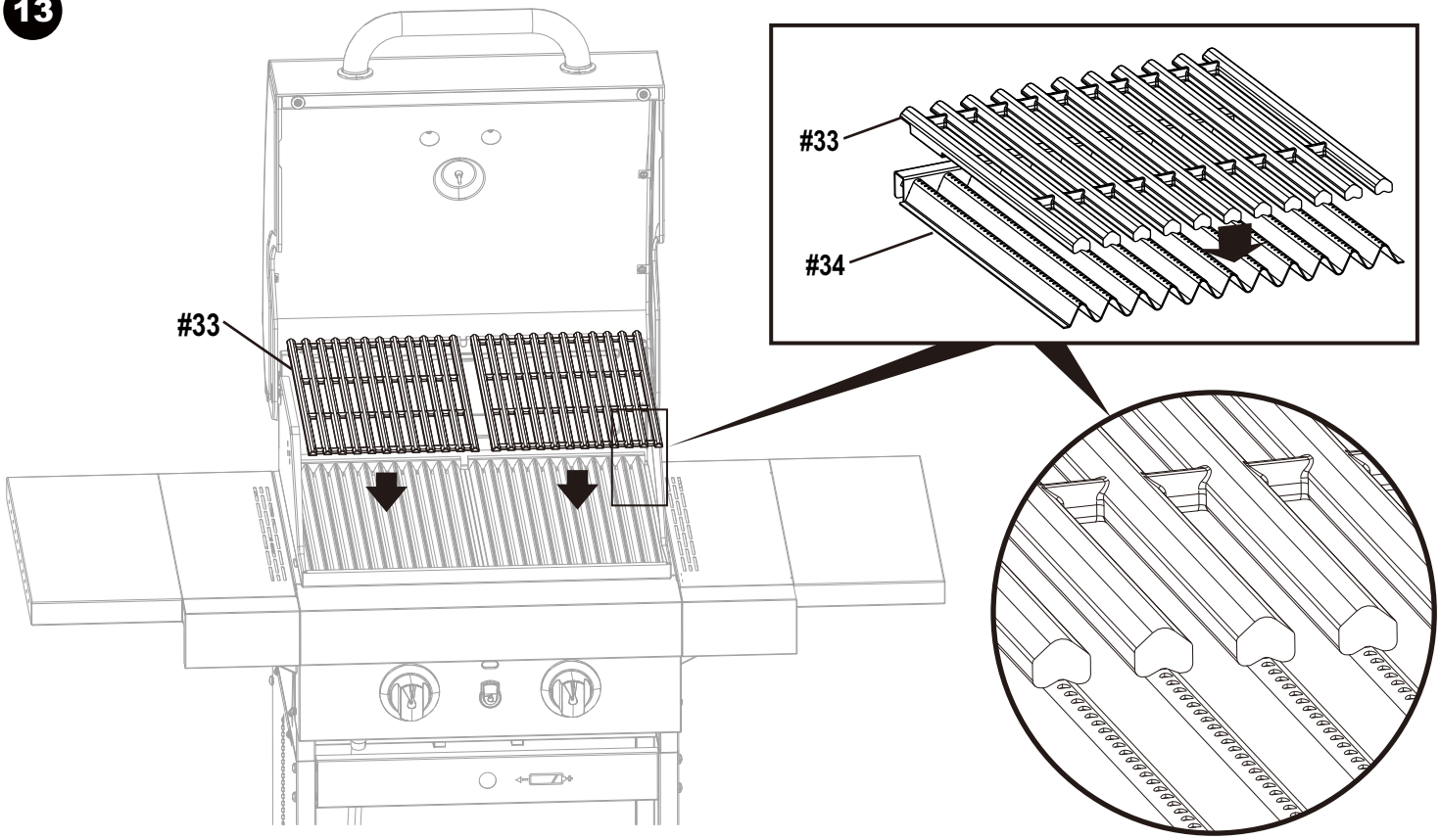

14

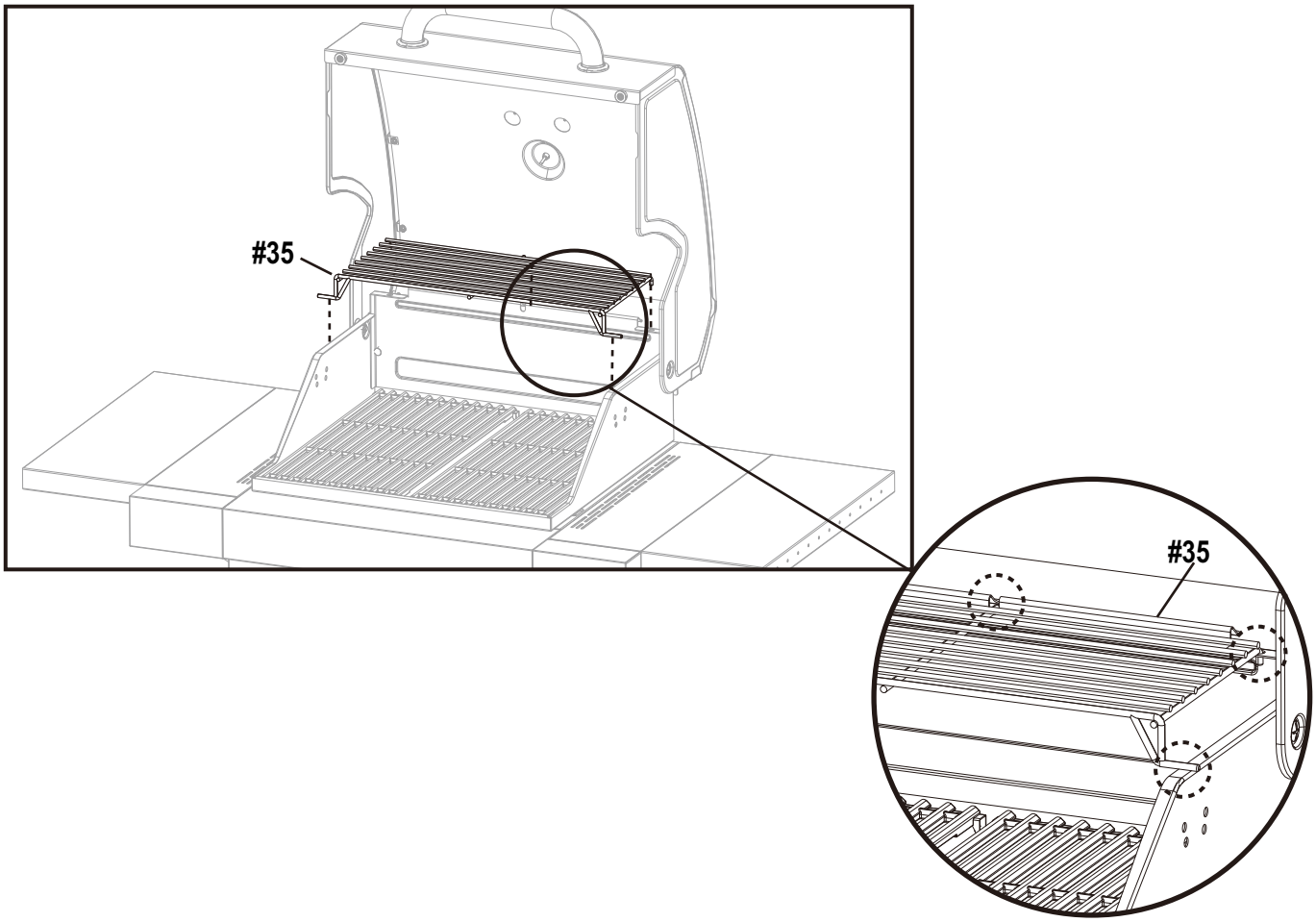

15

Ⓗ x1

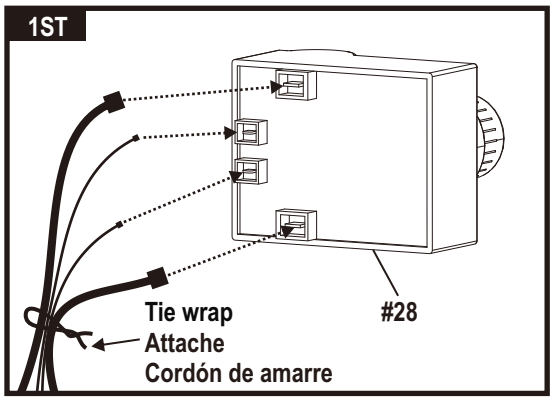

Note: remove the tie wraps
Remarque: retirez l'attache de câble
Nota: retire los cordones de amarre

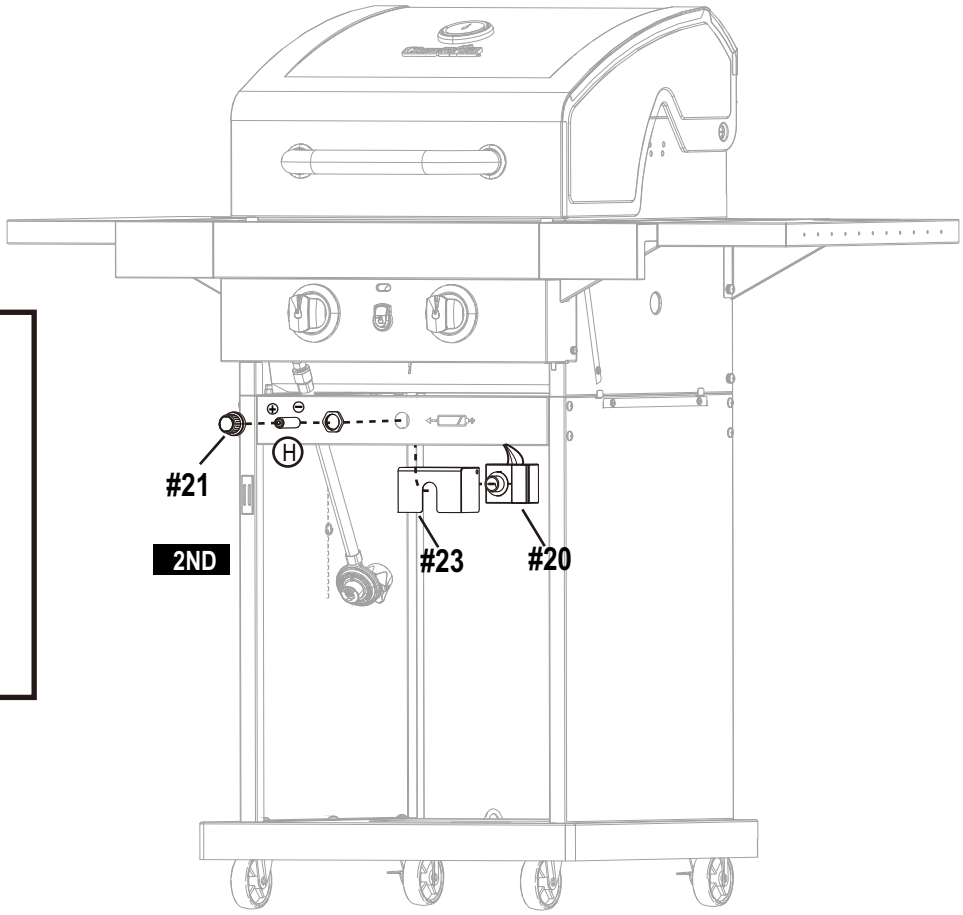

16

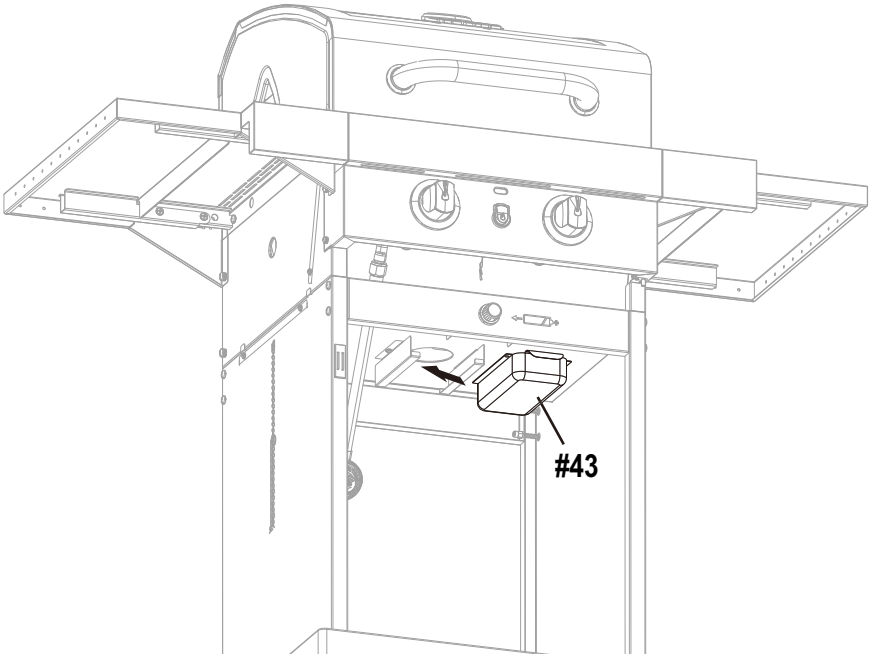

CAUTION

Failure to install grease tray will cause hot grease to drip from bottom of grill with risk of fire or property damage.

ATTENTION

Si le plateau d'écoulement de la graisse n'est pas installé, de la graisse chaude pourrait s'écouler de la partie inférieure du gril et provoquer un risque d'incendie ou des dommages matériels.

ADVERTENCIA

Si no instala la bandeja para la grasa goteará grasa caliente desde el fondo de la parrilla, lo que puede ocasionar el riesgo de incendio o de daños materiales.

17

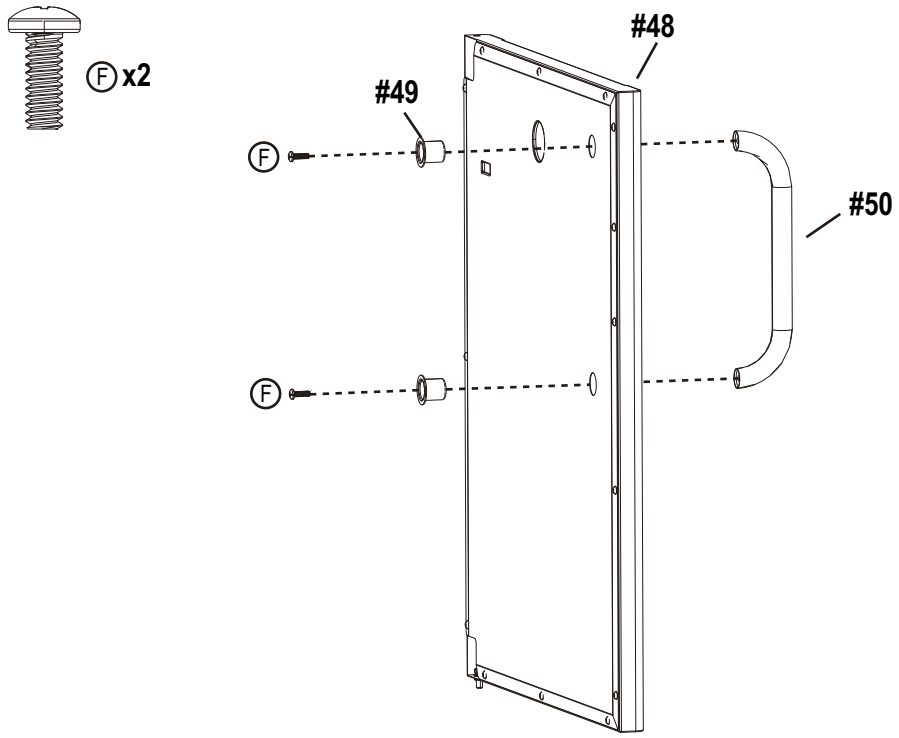

18

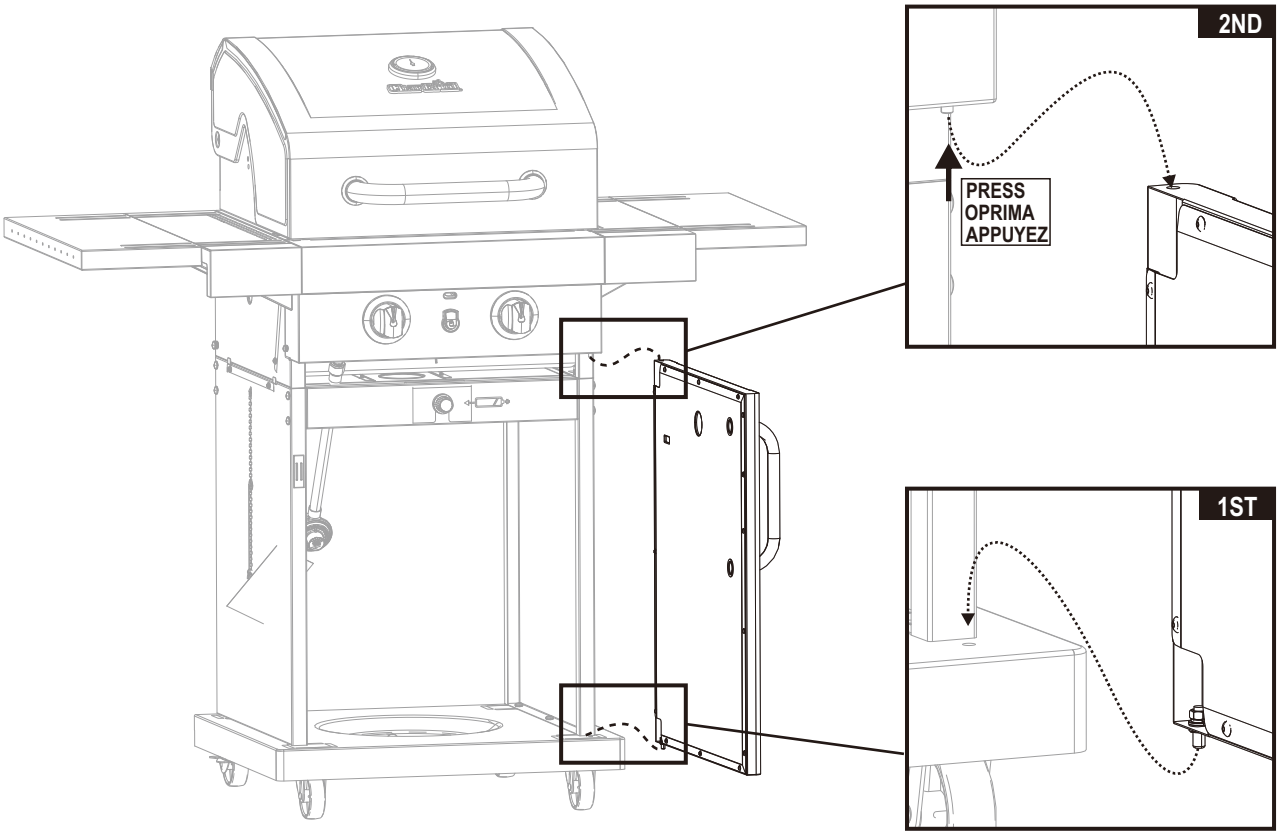

19

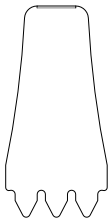

Ⓙ x1

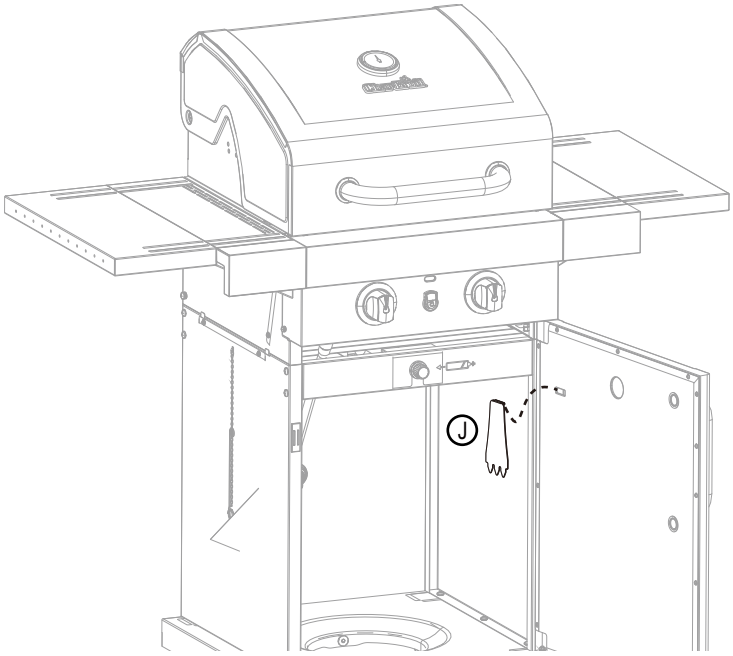

20

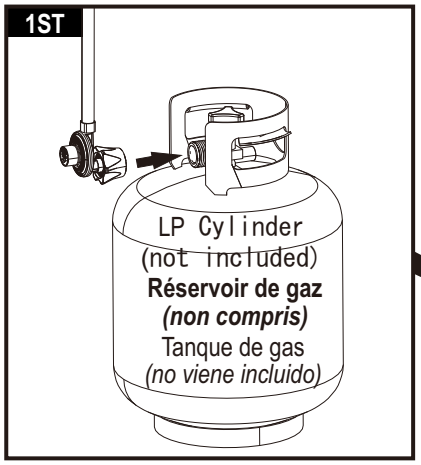

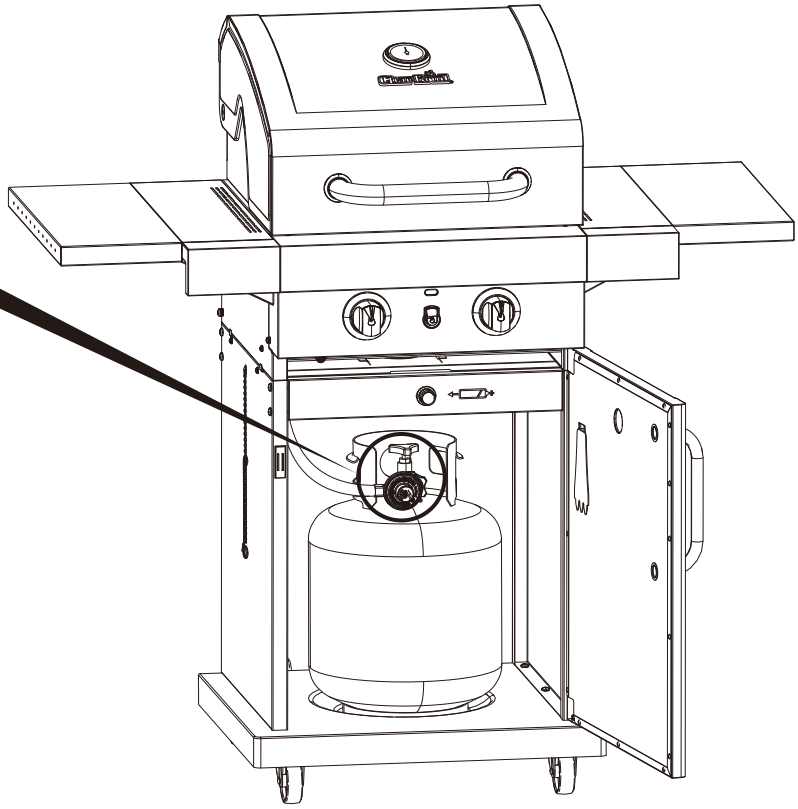

CAUTION

Cylinder valve must face to front of cart once tank is attached. Failure to install cylinder correctly may allow gas hose to be damaged in operation, resulting in the risk of fire.

ATTENTION

Le robinet du réservoir doit être orienté vers le devant du chariot une fois le réservoir fixé en position. Une mauvaise installation du reservoir pourrait endommager le tuyau à gaz, créant un risque d'incendie.

ADVERTENCIA

Una vez que el tanque haya quedado instalado, la válvula del tanque debe quedar orientada hacia la parte delantera del carrito. Si no se instala correctamente el tanque, se puede dañar la manguera de gas durante el suministro, lo que puede ocasionar el riesgo de incendio.

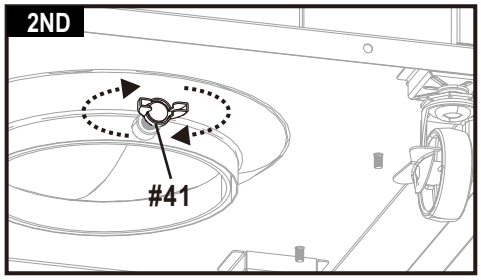

EMERGENCIES: If a gas leak cannot be stopped, or a fire occurs due to gas leakage, call the fire department.

Emergencies	Possible Cause	Prevention/Solution
Gas leaking from cracked/cut/burned hose.	• Damaged hose.	•Turn off gas at LP cylinder or at source on natural gas systems. Discontinue use of product and replace valve/hose/regulator. Once valve/hose/regulator replaced conduct complete leak check per manual.
Gas leaking from LP cylinder.	• Mechanical failure due to rusting or mishandling.	• Replace LP cylinder.
Gas leaking from LP cylinder valve.	• Failure of cylinder valve from mishandling or mechanical failure.	• Turn off LP cylinder valve. Return LP cylinder to gas supplier.
Gas leaking between LP cylinder and regulator connection.	• Improper installation, connection not tight, and/or failure of rubber seal in clyinder valve.	•Turn off LP cylinder valve. Remove regulator from cylinder and visually inspect rubber seal in cylinder valve for damage. If damage or cannot correct leak replace cylinder. See LP Cylinder Leak Test and Connecting Regulator to the LP Cylinder.
Fire coming through control panel.	• Fire in burner tube section of burner due to blockage.	• Turn off control knobs and LP cylinder valve. Leave lid open to allow flames to die down. After fire is out and grill is cold, remove burner and inspect for spider nests or rust. See Natural Hazard and Cleaning the Burner Assembly pages.
Grease fire or continuous excessive flames above cooking surface.	• Too much grease buildup in burner area.	• Turn off control knobs and LP cylinder valve. Leave lid open to allow flames to die down. After cooling, clean food particles and excess grease from inside firebox area, grease tray, and other surfaces.

Troubleshooting

Problem	Possible Cause	Prevention/Solution
Burner(s) will not light using ignitor. (See Electronic Ignition Troubleshooting also) *Continued on next page.*	**GAS ISSUES:**	
	• Trying to light wrong burner.	• See instructions on control panel and in Use and Care section.
	• Burner not engaged with control valve.	• Make sure valves are positioned inside of burner tubes.
	• Obstruction in burner.	• Ensure burner tubes are not obstructed with spider webs or other matter. See cleaning section of Use and Care.
	• No gas flow.	• Make sure LP cylinder is not empty. If LP cylinder is not empty, refer to "Sudden drop in gas flow."
	• Coupling nut and LP cylinder valve not fully connected.	• Turn the coupling nut approximately one-half to three-quarters additional turn until solid stop. Tighten by hand only - do not use tools.
	ELECTRICAL ISSUES:	
	• Electrode cracked or broken; "sparks at crack."	• Replace electrode(s).
	• Electrode tip not in proper position. (Does not apply to SUREFIRE.)	Main Burners: • Tip of electrode should be pointing toward gas port opening on burner. The distance should be 1/8" to 1/4". Adjust if necessary. Sideburner: • Tip of electrode should be pointing toward gas port opening on burner. the distance should be 1/8" to 3/16". Adjust if necessary.
	• Wire and/or electrode covered with cooking residue.	• Clean wire and/or electrode with rubbing alcohol and clean swab.
	• Wires are loose or disconnected.	• Reconnect wires or replace electrode/wire assembly.
	• Wires are shorting (sparking) between ignitor and electrode.	• Replace ignitor wire/electrode assembly.
	• Dead battery.	• Replace with a new alkaline battery.
	ELECTRONIC IGNITION:	
	• No spark, no ignition noise.	• See Section I of Electronic Ignition System.
	• No spark, some ignition noise.	• See Section II of Electronic Ignition System.
	• Sparks, but not at electrode or at full strength.	• See Section III of Electronic Ignition System.
Burner(s) will not match light.	• See **"GAS ISSUES:"** .	
	• Match will not reach.	• Use long-stem match (fireplace match).
	• Improper method of match-lighting.	• See "Match-Lighting" section of Use and Care.

Troubleshooting (*continued*)

Problem	Possible Cause	Prevention/Solution
Sudden drop in gas flow or low flame.	• Out of gas. • Excess flow valve tripped. • Vapor lock at coupling nut/LP cylinder connection.	• Check for gas in LP cylinder. • Turn off knobs, wait 30 seconds and light grill. If flames are still low, turn off knobs and LP cylinder valve. Disconnect regulator. Reconnect regulator and leak-test. Turn on LP cylinder valve, wait 30 seconds and then light grill. • Turn off knobs and LP cylinder valve. Disconnect coupling nut from cylinder. Reconnect and retry.
Flames blow out.	• High or gusting winds. • Low on LP gas. • Excess flow valve tripped.	•Turn front of grill to face wind or increase flame height by turning gas valve to a higher postion. • Refill LP cylinder. • Refer to “Sudden drop in gas flow” above.
Flare-up.	• Grease buildup. • Excessive fat in meat. • Excessive cooking temperature.	• Clean burners and inside of grill/firebox. • Trim fat from meat before grilling. • Adjust (lower) temperature accordingly.
Persistent grease fire.	• Grease trapped by food buildup around burner system.	• Turn knobs to OFF. Turn gas off at LP cylinder. Leave lid in position and let fire burn out. After grill cools, remove and clean all parts.
Flashback (fire in burner tube(s)).	• Burner and/or burner tubes are blocked.	• Turn knobs to OFF. Clean burner and/or burner tubes. See burner cleaning section of Use and Care.
One burner does not light from other burner(s).	• Grease buildup or food particles in end(s) of carryover tube(s).	• Clean carry-over tube(s) with wire brush.

Troubleshooting - Electronic Ignition

Problem (Ignition)	Possible Cause	Check Procedure	Prevention/Solution
SECTION I No sparks appear at any electrodes when Electronic Ignition Button is pressed; **no noise** can be heard from spark module.	• Battery not installed properly. • Dead battery. • Button assembly not installed properly. • Faulty spark module.	• Check battery orientation. • Has battery been used previously? • Check to insure threads are properly engaged. Button should travel up and down without binding. • If no sparks are generated with new battery and good wire connections, module is faulty.	• Install battery (make sure that “+” and “–” connectors are oriented correctly, with “+” on cap end.) • Replace battery with new alkaline battery. • Unscrew button cap assembly and reinstall, making sure threads are aligned and engaged fully. • Replace spark module assembly.
SECTION II No sparks appear at any electrodes when Electronic Ignition Button is pressed; noise can be heard from spark module.	• Output lead connections not connected.	• Are output connections on and tight?	• Remove and reconnect all output connections at module and electrodes.
SECTION III Sparks are present but not at all electrodes and/or not at full strength	• Output lead connections not connected. • Arcing to grill away from burner(s). • Weak battery. • Electrodes are wet. • Electrodes cracked or broken “sparks at crack”.	• Are output connections on and tight? • If possible, observe grill in dark location. Operate ignition system and look for arcing between output wires and grill frame. • All sparks present but weak or at slow rate. • Has moisture accumulated on electrode and/or in burner ports? • Inspect electrodes for cracks.	• Remove and reconnect all output connections at module and electrodes. • If sparks are observed other than from burner(s), wire insulation may be damaged. Replace wires. • Replace battery with a new alkaline battery. • Use paper towel to remove moisture. • Replace cracked or broken electrodes.

PARTS DIAGRAM/ SCHÉMA DES PIÈCES / VISTA ESQUEMÁTICA DE PIEZAS

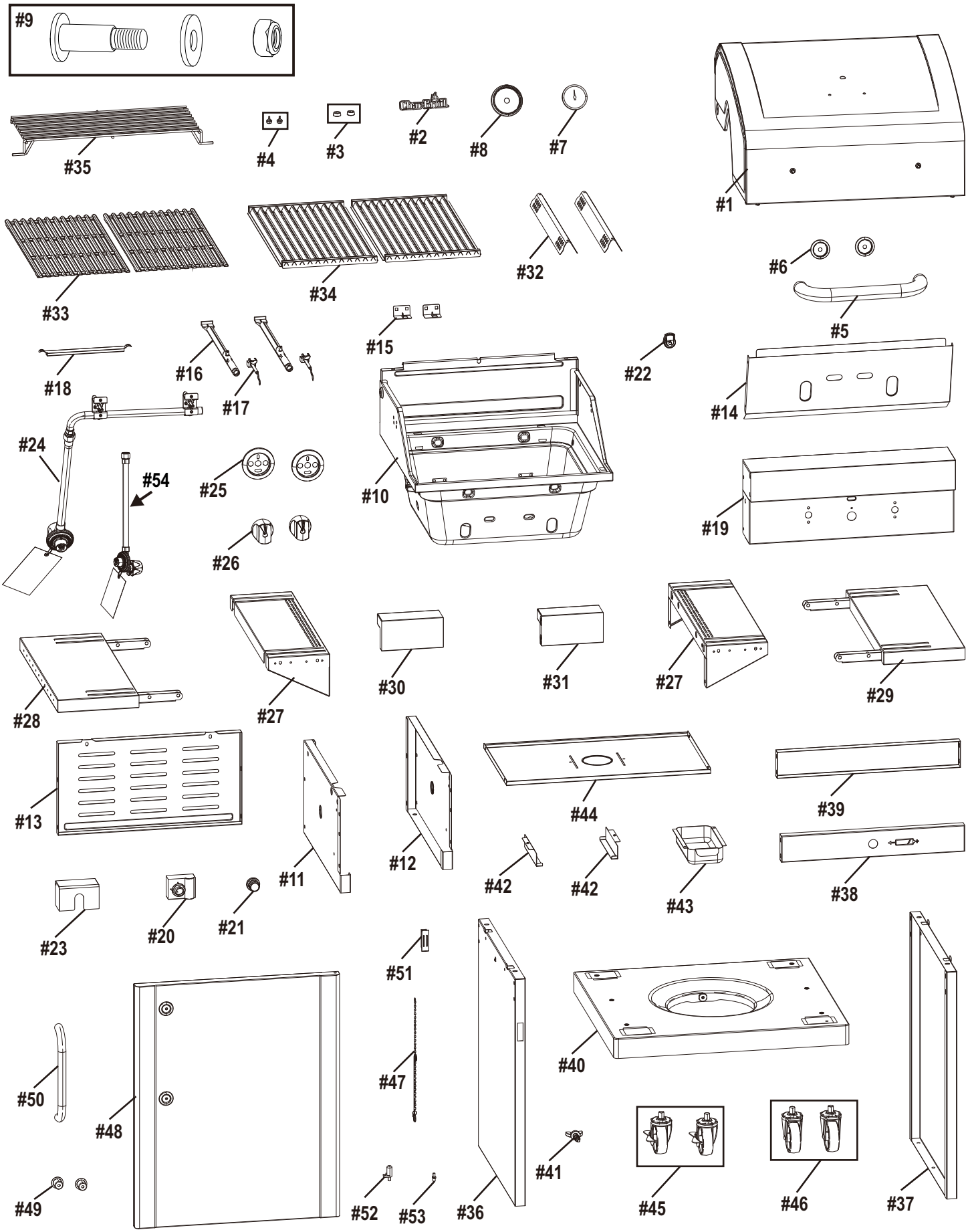

PARTS LIST

Key	Qty	Description
1	1	TOP LID
2	1	LOGO PLATE F/ LID
3	2	RUBBER BUMPER, W/ HOLE, F/ TOP LID
4	2	LID BUMPER, ROUND
5	1	HANDLE F/ LID
6	2	BEZEL, F/ LID HANDLE
7	1	THERMOMETER
8	1	BEZEL, F/ THERMOMETER
9	1	TOP LID HARDWARE
10	1	FIREBOX
11	1	LEFT, FIREBOX PANEL
12	1	RIGHT, FIREBOX PANEL
13	1	REAR FIREBOX PANEL
14	1	HEAT SHIELD, FIREBOX
15	2	BURNER BRACE
16	2	MAIN BURNER
17	2	ELECTRODE, F/ MAIN BURNER
18	1	CARRY OVER TUBE
19	1	CONTROL PANEL, MAIN
20	1	ELECTRONIC IGNITION MODULE
21	1	CAP, F/ IGNITION MODULE
22	1	IGNITER SWITCH MODULE
23	1	SHIELD, F/ ELECTRONIC IGNITION MODULE
24	1	HOSE VALVE REGULATOR ASSEMBLY
25	2	BEZEL F/ CONTROL KNOB
26	2	CONTROL KNOB
27	2	SIDE SHELF, FIXED
28	1	LEFT SIDE SHELF, FOLDING
29	1	RIGHT SIDE SHELF, FOLDING
30	1	FASCIA, F/ LEFT SIDE SHELF
31	1	FASCIA, F/ RIGHT SIDE SHELF
32	2	HEAT TENT
33	2	COOKING GRATE
34	2	COOKING GRATE, INFRARED EMITTER
35	1	WARMING RACK
36	1	LEFT, CART FRAME
37	1	RIGHT, CART FRAME
38	1	UPPER DOOR BRACE
39	1	BACK RAIL

Key	Qty	Description
40	1	BOTTOM SHELF
41	1	TANK SCREW, F/ BOTTOM SHELF
42	2	RAIL, F/ GREASE TRAY
43	1	GREASE TRAY
44	1	HEAT SHIELD, F/ TANK
45	2	CASTER, LOCKING
46	2	CASTER, FIXED
47	1	MATCH HOLDER
48	1	DOOR, NO HANDLE
49	2	BUSHING, F/ DOOR HANDLE
50	1	DOOR HANDLE
51	1	MAGNET ASSEMBLY
52	1	SPRING PIN, F/ DOOR
53	1	FIXED PIN, F/ DOOR
54	1	HOSE/ REGULATOR REPLACEMENT ONLY

NOT Pictured

...	1	CASTER PIN
...	1	ASSEMBLY MANUAL, ENGLISH, FRENCH, SPANISH
...	1	HARDWARE PACK
...	1	CLEANING TOOL

NOTE: Some grill parts shown in the assembly steps may differ slightly in appearance from those on your particular grill model. However, the method of assembly remains the same.

HARDWARE LIST/ LISTA DE HERRAJES/ LISTE DES FERRURES

Key/ Réf./ Clave	Description/ Description/ Descripción	Picture/ Illustré/ Ilustra	Qty/ Qté/ Cant
A	1/4-20x1-1/2" Screw Vis ¼-20×1½ po Tornillo de 1/4 -20 x 1-1/2"		8
B	1/4-20x1/2" Screw Vis ¼-20×½ po Tornillo de 1/4 -20 x 1/2"		20
C	Shoulder Screw Vis à épaulement Tornillo con pivote		4
D	1/4 Nut Écrou de ¼ Tuerca de 1/4		4
E	#10-24x3/8" Screw Vis nº 10-24×3/8 po Tornillo No. 10-24 de 3/8"		4
F	#10-24x3/4" Screw Vis nº 10-24×3/4 po Tornillo No. 10-24 de 3/4"		2
G	#8x3/8" Sheet Metal Screw Vis à tôle nº 8×3/8 po Tornillo para metale No. 8 de 3/8"		6
H	Battery AA Pile AA Batería AA	- +	1
J	Cleaning tool Nettoyage de l'instrument Herramienta de limpieza para el emisor IR		1
K	Caster pin Dispositif de blocage pour roulettes Clavija para la rueda		1

©2015 Char-Broil, LLC. Columbus, GA, 31902. Printed in China. Imprimé en China. Impreso en China.
©2015 Assembly instructions. ©2015 Assemblée des instructions. ©2015 Instrucciones de ensamblado.