virtufit

Kids Trampoline with Safety Net - 140 cm

User manual

CE 0-3

EN

INDEX

SAFETY INSTRUCTIONS	3 - 5
CHECKLIST	6 - 7
ASSEMBLY INSTRUCTIONS	8 - 14
MOVING THE TRAMPOLINE	15
MAINTENANCE	16
BASIC TRAMPOLINE SKILLS	17

WARNING:

Consult your child's doctor before jumping, especially for children with health problems. Read all instructions before using the trampoline. VirtuFit takes no responsibility for any injuries or material damage caused by the use of this product. Read the manual carefully before you start to assemble and/or use the trampoline. Adult supervision is required at all times.

ATTENTION

- Recommended age 6+ years.
- No somersaults or flips - can cause serious injury. Jump without shoes.
- Not suitable for children under 36 months - small parts, choking hazard.
- The trampoline is intended for outdoor use only.
- Only one user at a time. Danger of Collision hazard.
- Always close the net opening before jumping.
- Do not use the mat when it is wet
- Empty pockets and hands before jumping
- Always jump in the middle of the mat
- Do not eat while jumping. It is advisable not to bounce immediately after a meal.
- Do not exit by a jump
- Do not use in strong wind conditions and secure the trampoline.
- The trampoline shall be assembled by an adult in accordance with the assembly instructions and thereafter checked before the first use.
- The max user weight is 50 KGS.
- Limit the time of continuous usage (make regular stops).

ADVISORY

- This trampoline is not intended to be buried in the ground.
- The trampoline must be placed on a level surface at least 2m from any structures or obstructions such as fence, garage, house, overhanging branches, laundry lines or electrical wires.
- Do not install the trampoline over concrete, asphalt or any other hard surface. Also not in proximity of other conflicting installations, such as padding / swimming pools, swings, slides or climbing frames.
- Any modifications made by the consumer to the original trampoline (e.g. the adding of an accessory) shall be carried out according to the instructions of the manufacturer.
- Inspect trampoline / enclosure net before each use.
- If an access ladder is used it should be removed when trampoline is not in use.
- Make sure there are no children / animals / obstructions underneath the trampoline.
- Access the trampoline through the door of the enclosure net only. Making sure you securely close it before bouncing. Use: Ensure the door is securely closed before bouncing.
- Don't intentionally rebound off the enclosure net as this will weaken it.
- Only attach manufacturer approved accessories to the trampoline and enclosure net.
- Always jump in the middle of the mat and practice bounce techniques safely with adult supervision and guidance.

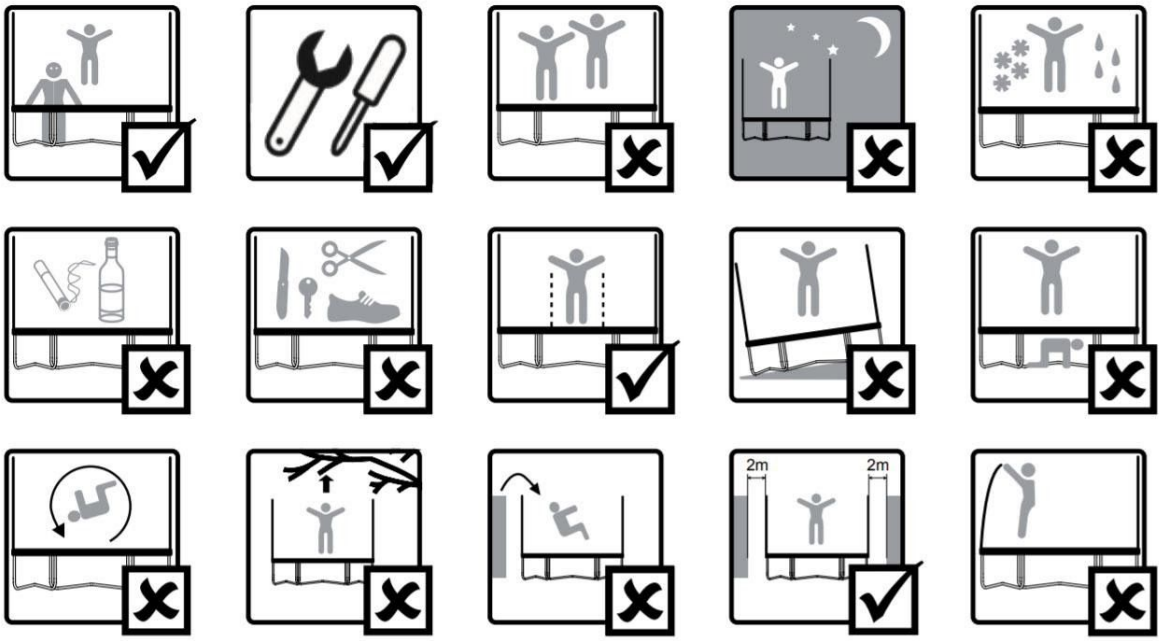

Warranty claim is excluded if the cause of the defect is the result of:

- Maintenance assembly and repair work not performed by an official dealer.
- In case of improper use, neglect and / or poor maintenance.
- Failure to maintain the fitness equipment in accordance with the manufacturer's instructions.
- The product has been incorporated into the soil.
- Defects caused by external influences (eg climate and weather influences).

ASSEMBLY AND MAINTENANCE INSTRUCTIONS

- Attention to the need to carry out checks and maintenance of the main parts (frame, suspension system, mat, padding, and enclosure) at the beginning of each season and also at regular intervals of every 2 weeks, pointing out that if these checks are not carried out, the trampoline could become dangerous.
- Check all nuts and bolts for tightness and tighten when required.
- Check that all spring-loaded (pit pin) joints are still intact and cannot become dislodged during play.
- Check all coverings and sharp edges and replace when required.
- Retain the maintenance instruction manual.
- Outdoor trampolines should be equipped with a device that in strong wind conditions avoid displacement due to wind (e.g. steel bars in the ground or loads like sand bag or water bags) and/or items catching wind like net and mat should be removed.
- In certain countries during winter period, the snow load and the very low temperature can damage the trampoline. It is recommended to remove the snow and store the mat and the enclosure indoor.
- Check that mat, padding, enclosure and soft surface are without defects.
- Make sure that the hook-and-loop fasteners are closed correctly during use of trampoline!
- Trampoline and net should be packed away in winter. Make sure all parts are dry and packed securely.
- Store dry to support product longevity. Always be aware of wear and tear due to weather and wind.
- We recommend securing the trampoline in strong winds. Tie the trampoline down with ropes attached to the trampoline pad. Tie the trampoline down in a minimum of three places distributed evenly across the trampoline frame.
- Do not secure the legs as these may become misaligned and ruin the trampoline. Dismantle or remove the trampoline completely, if required. It may result in great danger if the trampoline is not secured in strong winds.
- If the trampoline is not used for short periods of time and to avoid jump mat debris caused by fallen leaves and twigs, It's recommended usage of a Weather Cover. When the trampoline is not used for a longer period of time (e.g. during the winter). It's recommended storing the trampoline, especially the protective padding, in a dry area to support product longevity.

NOTE! ***Sunlight, rain, snow and extreme temperatures reduce the strength of these parts over time.***

TOOLKIT

When you open the carton, and you will find the below parts in the carton. Place all parts on the floor. Make sure you have all the parts listed. If parts are missing, please contact the supplier.

#	DESCRIPTION		QTY
A	Frame Cover		1
B	Jumping Mat		1
C	Top Rail		6
D	Spring		30
E	W-Shaped Leg		3
F	Spring Tool		1

TOOLKIT

#	DESCRIPTION		QTY
G	Fork Svrew	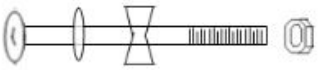	6
H	Spanner	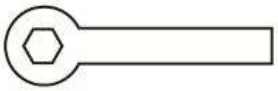	1
I	Tube Cap		6
J	Upper Pole Tube		6
K	Bottom Pole Tube		6
L	Enclosure Net	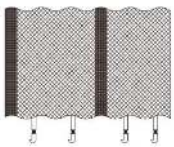	1
M	9-Shaped Screw		6
O	Screw		6
P	Screwdriver	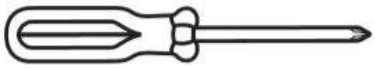	1

Missing parts: If you think you are missing certain parts in your package, carefully check the styrofoa and the trampoline. Some parts (bolts, screws, etc.) are already attached to/in the trampoline.

Use gloves to protect your hands from bottlenecks during assembly. When you're ready to get started, make sure you have plenty of room and a clean, dry area for mounting.

Read the assembly instructions below before you start mounting the trampoline. Incorrect mounting will damage the trampoline frame:

- Make sure the trampoline is placed on level ground. Uneven ground surfaces may cause the trampoline frame to warp (FIG 1).
- Make sure that all bolts holding the frame joints are tightened completely before installing the springs. Failure to do this properly will cause the frame to warp.
- Make sure NOT to use one's leg to push against the trampoline leg or frame when loading the springs. It will cause the trampoline to warp (FIG 2).
- DO NOT load the springs onto the frame on only one side of the trampoline. Uneven distribution of tension from the springs will cause the frame to warp (FIG 2).
- If the trampoline frame warps up, do not be alarmed as the "Quad-lock" system is designed to be flexible. Push down on the part of the frame that warped with two people as shown. The frame will level out (FIG 3).

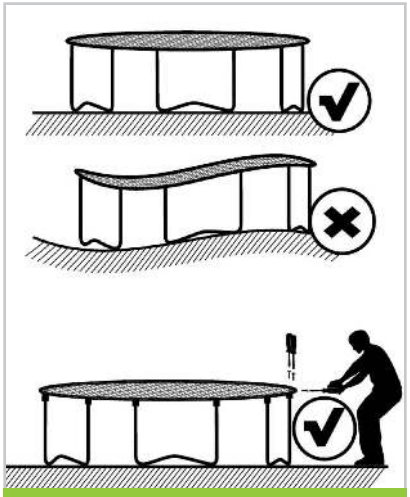

FIG 1

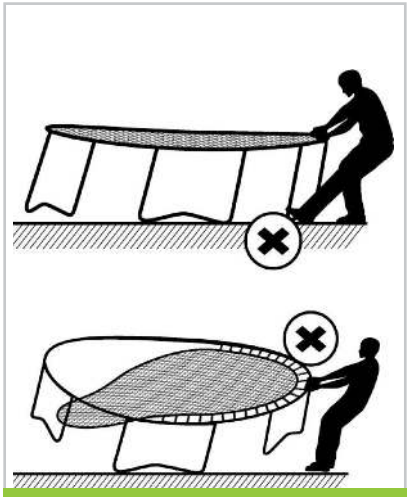

FIG 2

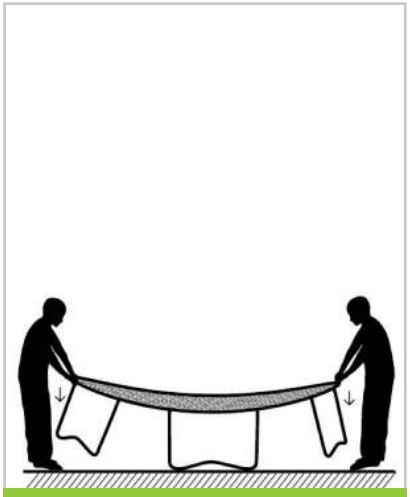

FIG 3

NOTE! ***For the next assembly 2 adults in good physical condition are required. Wear good shoes and keep balance to avoid a fall. Failure to follow all instructions and warnings exactly could result in serious injury.***

STEP 1

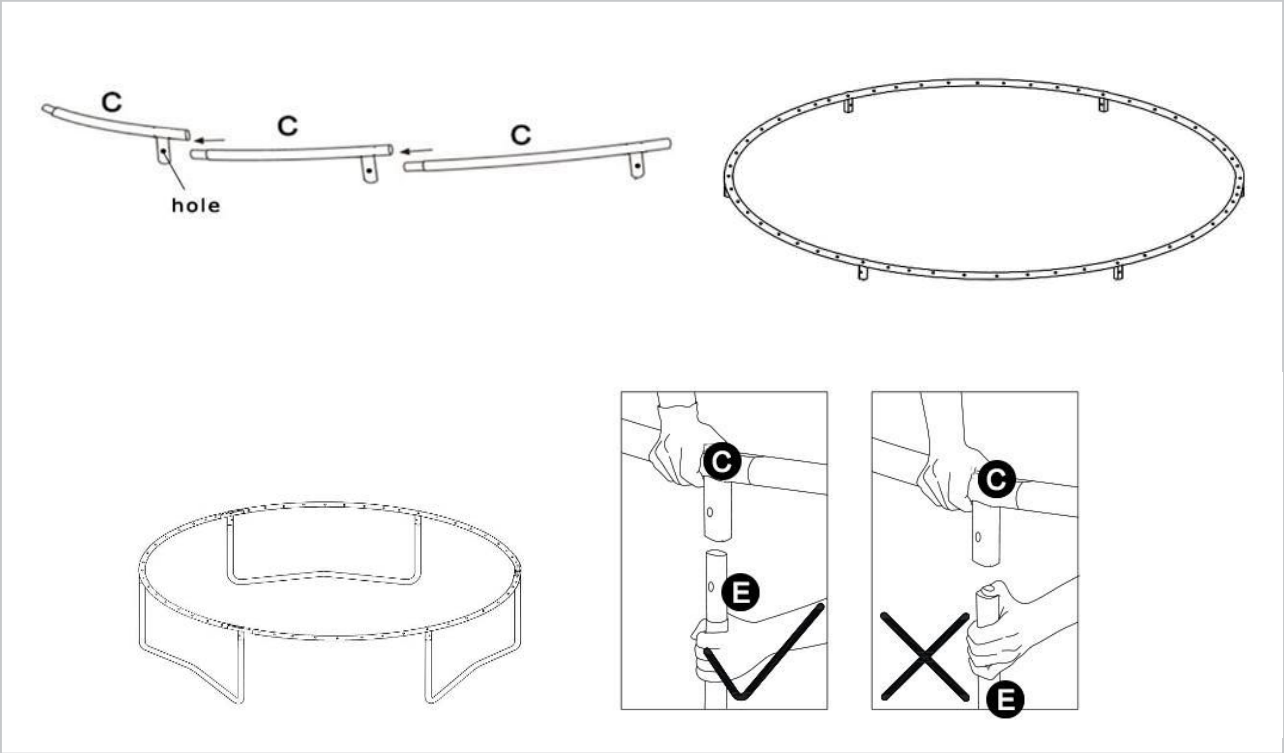

- Begin by attaching Top Rails (C) together, continue until you form a large circle. Have a second person or use a wall to apply some resistance against the frame to help it shift into place.

- Two people will be necessary at this point to assemble the trampoline. One person lifts up the circle frames. The other person lifts the U shaped leg tubes to a standing (vertical) position and inserts the welded tubes into a U shaped leg tubes. Ensure the locking holes are aligned.

NOTE! ***Do not place hands near the opening when connecting the tubes.***

STEP 2

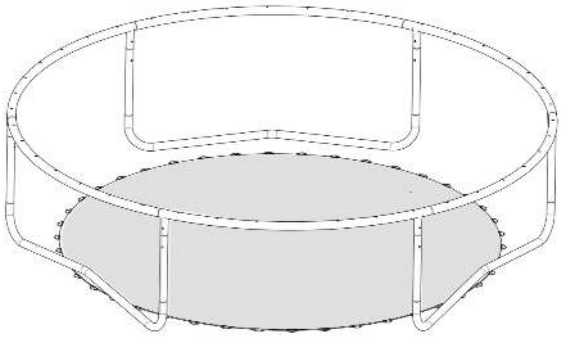

NOTE! ***2 adults may be required to complete placement of all springs. Springs will create high levels of tension when assembled. Please take care not to pinch your fingers.***

- Lay out the Jumping Mat (B) inside the frame.

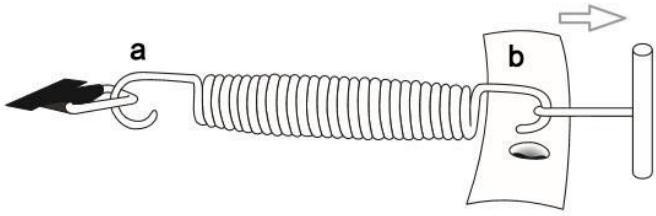

- Take Spring (D) and insert end (b) into Top rail tube, then put end (a) of the spring into trampoline Jumping Mat (B) rings.

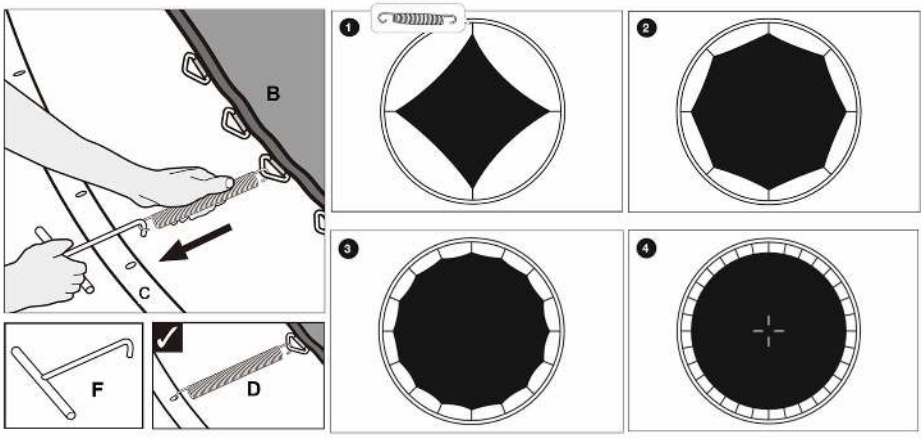

- Hold Spring Tool (F) overhand and pull spring hook towards Top rail (C) as picture shown; drop hook into frame hole until it latches on completely, tap it down if hook is not completely in the hole.

IMPORTANT

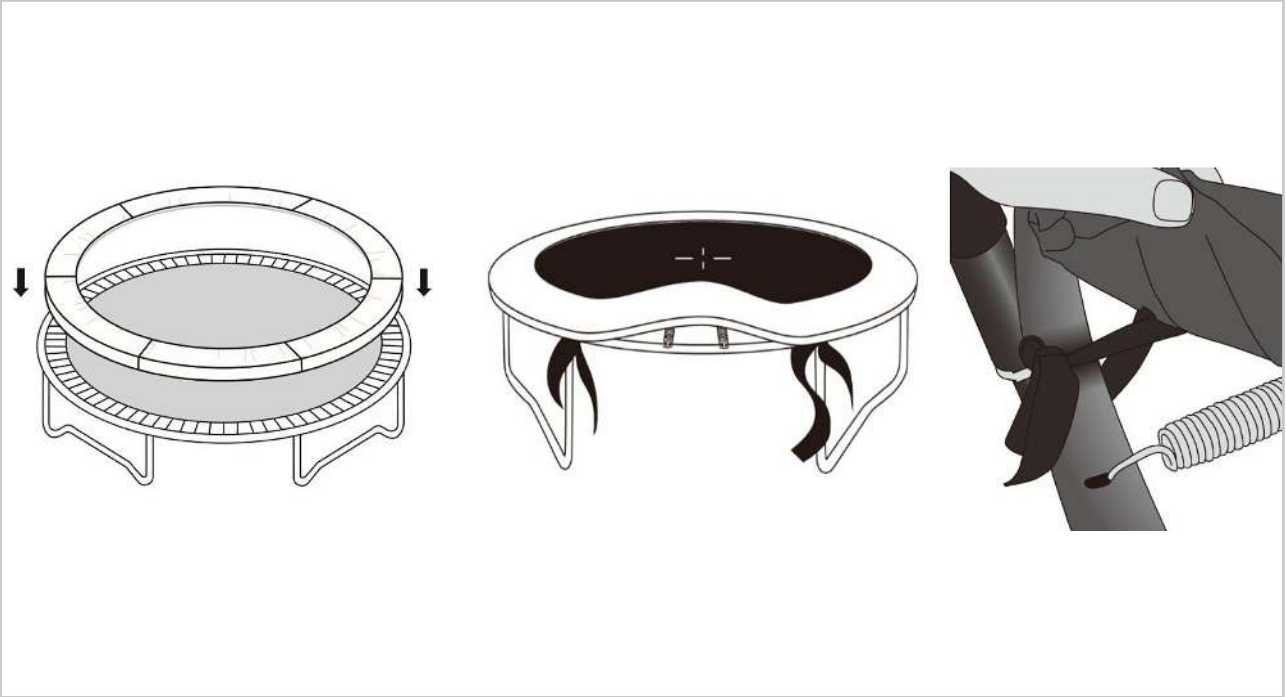

- Springs must be attached the right way around and fully inserted into the holes along the top of the frame.
- It is easier to place one hand on the frame and pull the spring towards you.
- Make sure that (a) is attached to the D-rings of the jumping mat and(b) is attached to the trampoline frame.
- The placement of the next spring must be on the opposite side of frame, then center adjacent, then opposite. It must be done this way so the tension of the spring is spread equality.
- To ensure that you have started to fit the bed correctly, please count the spring holes in between each top rail to make sure that you have the same number of spring holes in the top rails.
- Make sure that the D-rings on the bed, match the number of holes along the top rails.
- If you notice that you have skipped a hole and D-ring connection, recount, remove and adjust accordingly.

Installing the Protective Edge:

- Lay Frame Cover (A) on outer edge, so springs are covered. It should be fitted like a shower cap. It should be fitted like a shower cap. Please ensure it covers all metal parts.
- Tie the strap located at the under side of the Frame Cover to frame. **Do not tie them to the springs.**

STEP 3

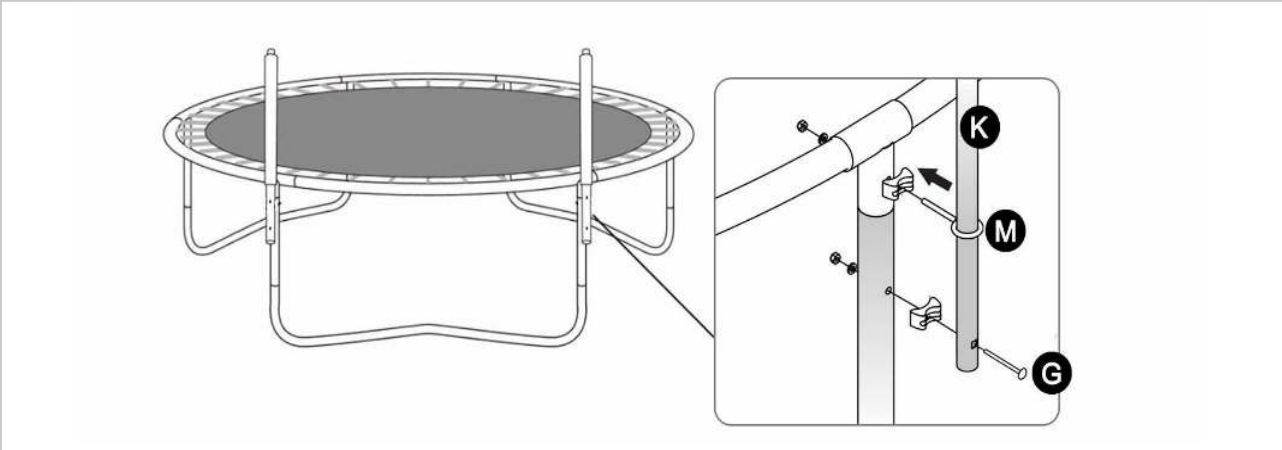

- Attach the tube sets to the leg up right of the trampoline as shown. Be sure to have someone help you hold the tube frame steady when you do this. First attach Bottom Pole Tube (K) to the leg frame with Fork Screw (G) & 9 Shaped Screw (M), secure with Nut by Spanner (H).

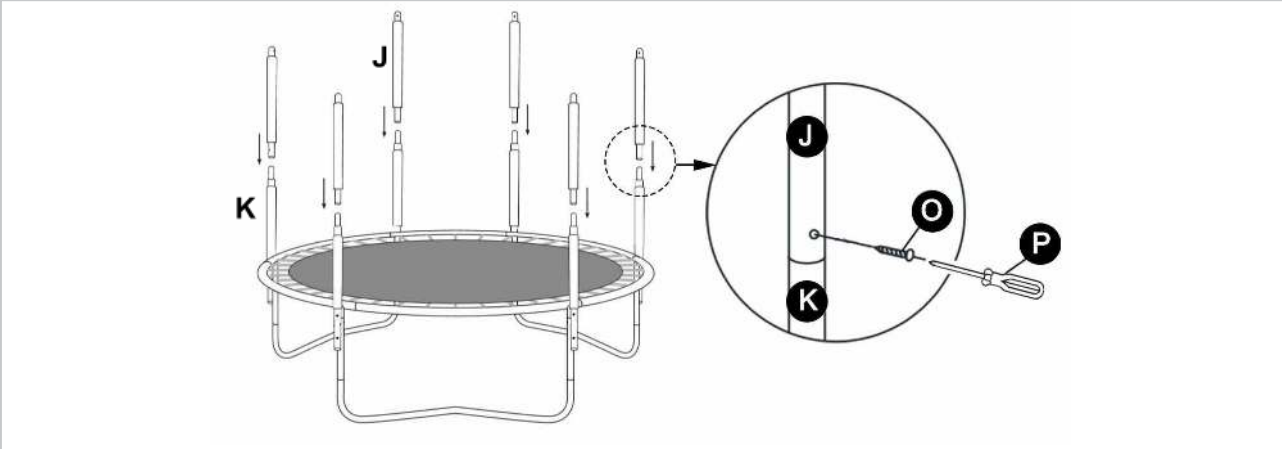

- Now, attach upper pole tube (J) to bottom pole tube (K) as shown. Do this for all sets of tubes.

NOTE! ***After connecting all enclosure poles, please check whether all Tube Caps (I) are insert into the Upper Pole Tube (J). As they are already installed before shipment. If not, please find from the carton and install as this photo shown.***

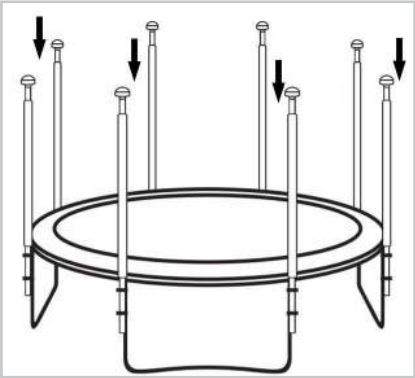

STEP 4

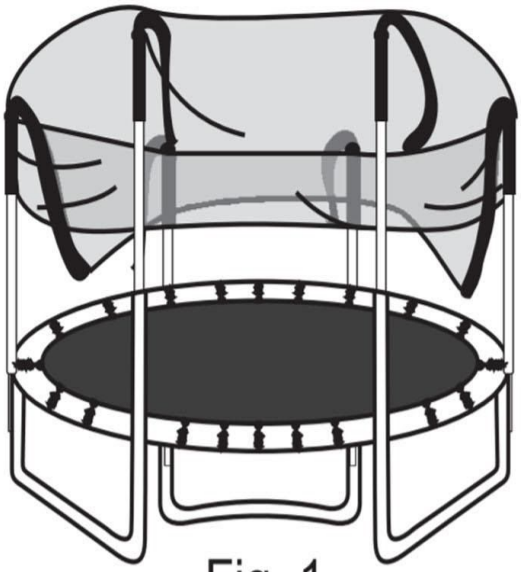

Fig. 1

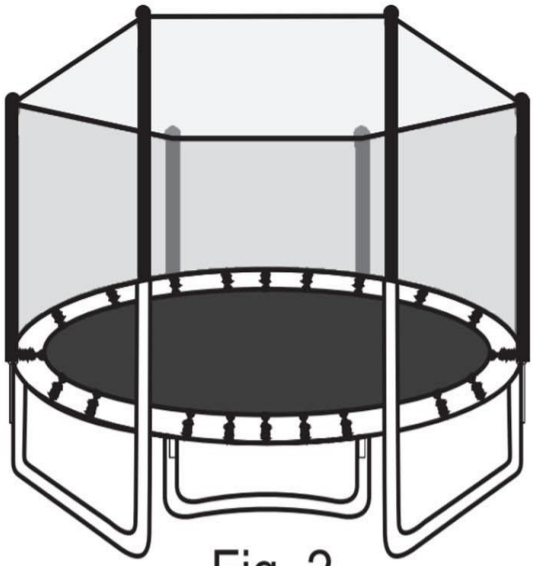

Fig. 2

- Start installing the Enclosure Net (L) to the poles by inserting the beginning of the sleeve on the Poles until it reaches 2ft and continue doing the same to all poles as figure 1.

- Pull down each sleeve, a few inches at a time till all sleeves reach the bottom of enclosure frame as shown in figure 2.

STEP 5

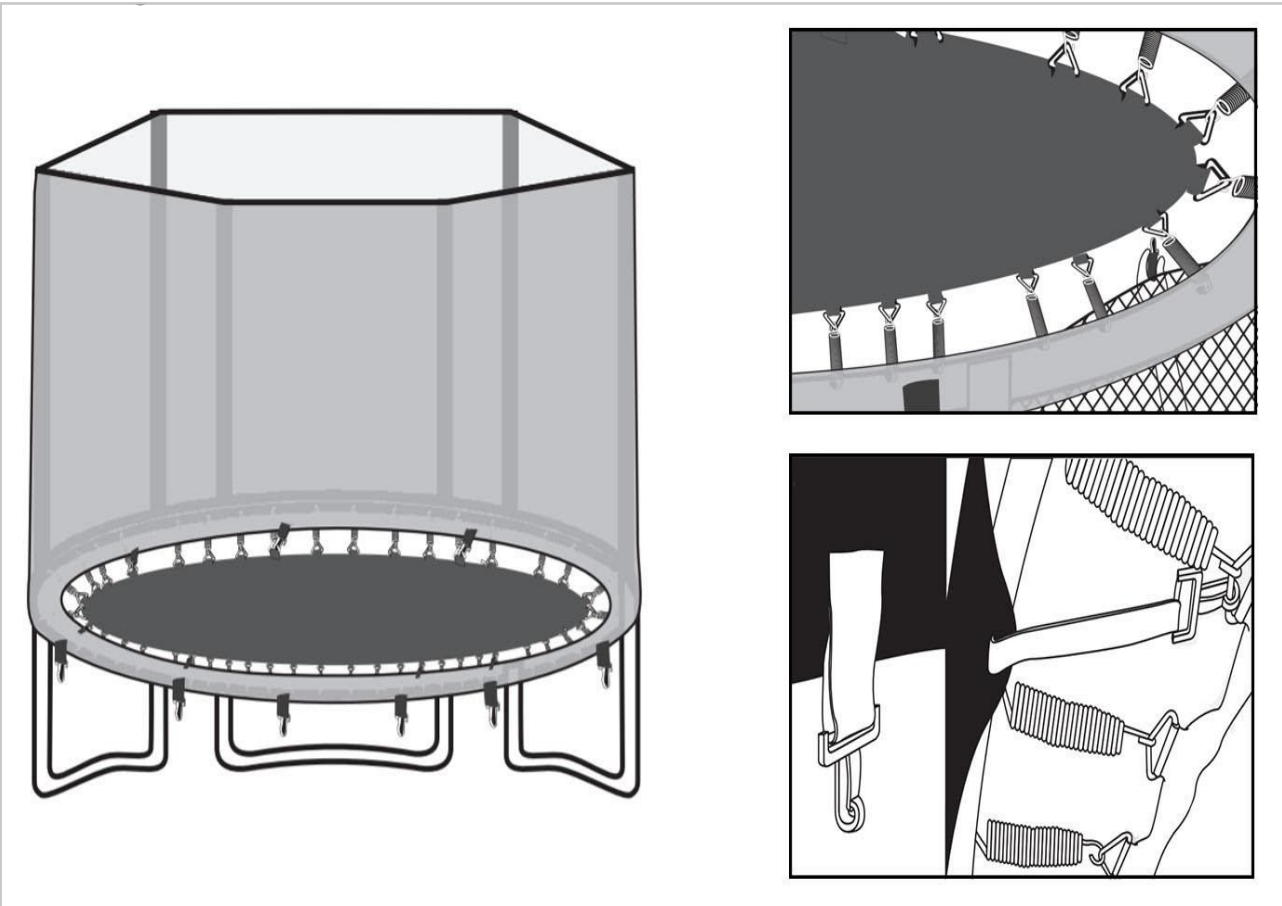

- Connect bottom straps/clips to every few Jumping mat V-rings from under the Safety Pad. Attach the clips from outside as figure shows

After assembling the trampoline, it is important that you perform the following safety checks:

- Ensure all screws and bolts are tightly secured.
- Look under the trampoline and check all springs are hooked securely to the frame and jumping mat rings.
- Inspect the spring cover and check it is covering the springs and frame and that it is tied securely.

The VirtuFit Kids Trampoline with Safety Net is now complete and ready to use!

INSTRUCTIONS

- Moving trampoline. If the trampoline and enclosure needs to be moved, it should be moved by two persons at least, kept horizontal, and lifted slightly.
- If necessary, the trampoline and enclosure can be taken for moving. To take the trampoline apart, follow the assembly steps in reverse order.
- If you need to move the trampoline, two people should be used at least.
- All connector points should be wrapped secured with weather resistant tape, such as duct tape. This will keep the frame intact during the move and prevent the connector points from dislocating and separating.
- When moving, lift the trampoline slightly of the ground and keep it horizontal to the ground. For any type of other move, you should disassemble the trampoline.

DAILY MAINTENANCE

- Clean and remove sweat / moisture after each use. Do not use aggressive cleaning agents
- Check that the trampoline is free from dust and dirt.

SEMI-ANNUAL MAINTENANCE

- Inspect all bolts and nuts related to the trampoline, tighten as required.

BASIC SKILLS USING THE TRAMPOLINE

BASE JUMP

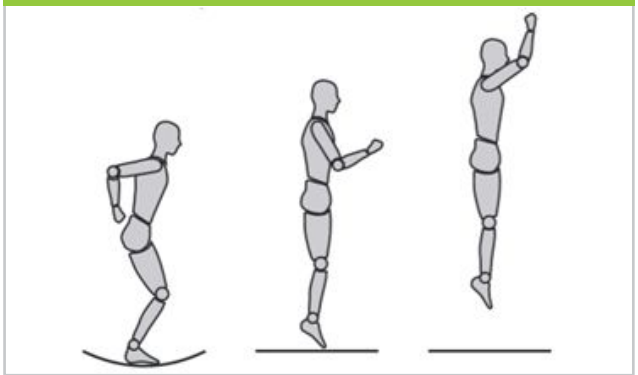

1. Start from a standing position with your head upright and your eyes on the frame.
2. Swing your arms forward and raise in one circular motion.
3. Bring your feet together and point your toes down while in the air.
4. Keep your feet about 1 foot apart if you lands on the bed.

KNEE JUMP

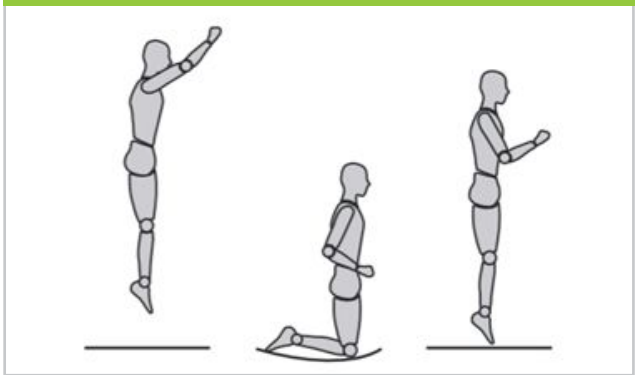

1. Start jumping from a standing position, keeping your eyes on the frame.
2. Land on your knees, keep your back straight and your body upright.
3. Bounce back to an upright position.

BELLY JUMP

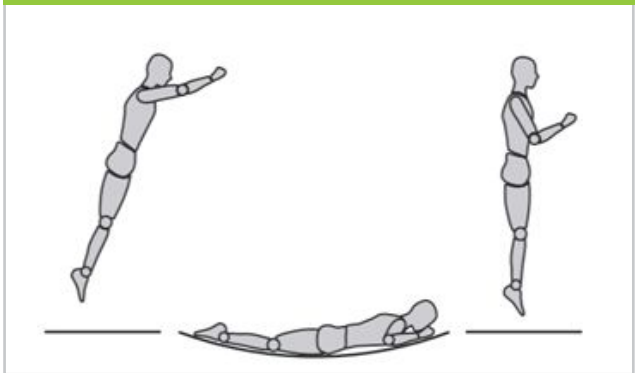

1. Start from a low jump and land on the jumping mat in a prone position.
2. Keep your head up and extend your arms on the front of the bed.
3. Push with your arms to return to one upright position.

SIT JUMP

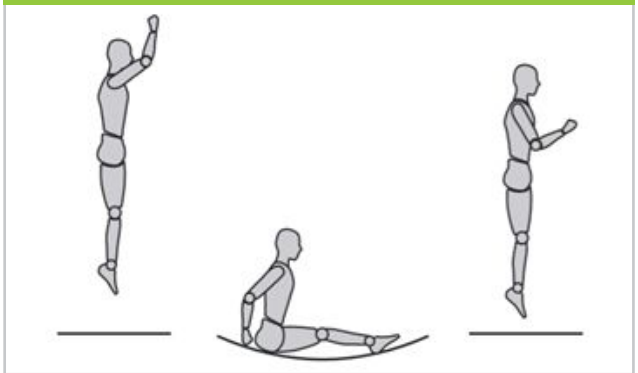

1. Land in a sitting position with your legs parallel to the jumping mat.
2. Place your hands on the jumping mat next to your Hips.
3. Push with your hands to return to one upright position.

A certified trampoline instructor should be contacted to further develop your trampoline skills

For questions or missing parts please contact your dealer.