CLICK ANYWHERE on THIS PAGE to RETURN TO THERMOSTAT WIRING WHITE RODGERS at InspectApedia.com

White Rodgers™

1F87-361

Programmable Electronic Digital Thermostat
INSTALLATION AND OPERATION INSTRUCTIONS

Operator: Save these instructions for future use!

FAILURE TO READ AND FOLLOW ALL INSTRUCTIONS CAREFULLY BEFORE INSTALLING OR OPERATING THIS CONTROL COULD CAUSE PERSONAL INJURY AND/OR PROPERTY DAMAGE.

DESCRIPTION

Your new White-Rodgers 7-Day Digital Thermostat uses the technology of a solid-state microcomputer to provide precise time/temperature control. This thermostat offers you the flexibility to design heating and cooling programs that fit your needs.

Features:

- Separate program for each day of the week with four separate time/temperature periods per day
- Simultaneous heat and cool program storage
- Preprogrammed temperature control
- Backlit display
- LCD continuously displays setpoint, and alternately displays time and room temperature
- Temperature override until next program period
- Manual program override (HOLD temperature)
- Temporary HOLD
- °F/°C convertibility
- Temperature range 45° to 90°F
- RC, RH, C, W, Y, G , O and B terminals
- Optional C terminal (Dual Power option)
- B and O terminals for single stage heat pumps (no auxiliary heat) or damper operation
- Program storage in case of power loss
- 2 "AA" Energizer® alkaline batteries included

PRECAUTIONS

This thermostat is intended for use with a low voltage system; do not use this thermostat with a line voltage system. If in doubt about whether your wiring is millivolt, line, or low voltage, have it inspected by a qualified heating and air conditioning contractor or electrician.

Do not exceed the specification ratings.

All wiring must conform to local and national electrical codes and ordinances.

This control is a precision instrument, and should be handled carefully. Rough handling or distorting components could cause the control to malfunction.

⚠ CAUTION

To prevent electrical shock and/or equipment damage, disconnect electric power to system at main fuse or circuit breaker box until installation is complete.

⚠ WARNING

Do not use on circuits exceeding specified voltage. Higher voltage will damage control and could cause shock or fire hazard.

Do not short out terminals on gas valve or primary control to test. Short or incorrect wiring will damage thermostat and could cause personal injury and/or property damage.

Thermostat installation and all components of the system shall conform to Class II circuits per the NEC code.

SPECIFICATIONS

ELECTRICAL DATA

Electrical Rating:
8 to 30 VAC 50/60 Hz. or D.C.
0.05 to 1.0 Amps (Load per terminal)
1.5 Amps Maximum Total Load (All terminals combined)

THERMAL DATA

Setpoint Temperature Range:
45°F to 90°F (7°C to 32°C)
Operating Ambient Temperature Range:
32°F to 105°F
Operating Humidity Range:
0 to 90% RH (non-condensing)
Shipping Temperature Range:
-4°F to 149°F

APPLICATIONS

For use with:

- Standard heat/cool or heat only systems
- Electric heat systems
- Gas or oil fired systems
- Gas systems with intermittent ignition devices (I.I.D.) and/or vent dampers
- Hydronic (hot water or steam) systems
- Single-stage heat pump systems (no auxiliary heat)
- Millivolt systems

DO NOT USE WITH:

- Multi-stage systems
- Systems exceeding 30 VAC and 1.5 amps
- 3-wire zoned hydronic heating systems

INSTALLATION

REMOVE OLD THERMOSTAT

1. Shut off electricity at the main fuse box until installation is complete. Ensure that electrical power is disconnected.
2. Remove the front cover of the old thermostat. **With wires still attached,** remove wall plate from the wall. If the old thermostat has a wall mounting plate, remove the thermostat and the wall mounting plate as an assembly.
3. **Identify each wire attached to the old thermostat using the labels enclosed with the new thermostat.**
4. Disconnect the wires from old thermostat one at a time. **DO NOT LET WIRES FALL BACK INTO THE WALL.**
5. Install new thermostat using the following procedures.

ATTENTION!

This product does not contain mercury. However, this product may replace a unit which contains mercury.

Do not open mercury cells. If a cell becomes damaged, do not touch any spilled mercury. Wearing nonabsorbent gloves, take up the spilled mercury with sand or other absorbent material and place into a container which can be sealed. If a cell becomes damaged, the unit should be discarded.

Mercury must not be discarded in household trash. When the unit this product is replacing is to be discarded, place in a suitable container. Refer to www.white-rodgers.com for location to send product containing mercury.

ELECTRIC HEAT OR SINGLE-STAGE HEAT PUMP SYSTEMS

This thermostat is configured from the factory to operate a heat/cool, fossil fuel (gas, oil, etc.), forced air system. It is configured correctly for any system that DOES NOT require the thermostat to energize the fan on a call for heat. If your system is an electric heat or heat-pump system that REQUIRES the thermostat to turn on the fan on a call for heat, locate the **ELECTRIC/GAS switch** on the back of the thermostat (see fig. 1) and switch it to the **ELECTRIC** position. This will allow the thermostat to energize the fan immediately on a call for heat. If you are unsure if the heating/cooling system requires the thermostat to control the fan, contact a qualified heating and air conditioning service person.

ATTACH THERMOSTAT BASE TO WALL

1. Remove the packing material from the thermostat. Gently pull the cover straight off the base. Forcing or prying on the thermostat will cause damage to the unit. If necessary, move the electric heat switch (see **ELECTRIC HEAT SYSTEMS,** above).
2. Connect wires beneath terminal screws on base using appropriate wiring schematic (see figs. 2 through 7).
3. Place base over hole in wall and mark mounting hole locations on wall using base as a template.
4. Move base out of the way. Drill mounting holes.
5. Fasten base loosely to wall, as shown in fig. 1, using two mounting screws. Place a level against bottom of base, adjust until level, and then tighten screws. (Leveling is for appearance only and will not affect thermostat operation.) If you are using existing mounting holes, or if holes drilled are too large and do not allow you to tighten base snugly, use plastic screw anchors to secure subbase.

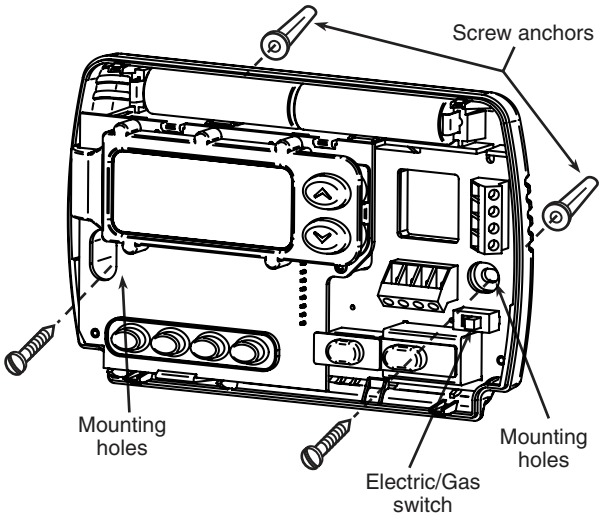

Figure 1. Thermostat Base

6. Push excess wire into wall and plug hole with a fire-resistant material (such as fiberglass insulation) to prevent drafts from affecting thermostat operation.

BATTERY LOCATION

2 “AA” alkaline batteries are included in the thermostat at the factory with a battery tag to prevent power drainage. **You must remove the battery tag to engage the batteries.**

If **“BATT”** or **“CHANGE ▭”** is displayed, the batteries are low and should be replaced with fresh “AA” Energizer® alkaline batteries. To replace batteries, install the batteries along the top of the base (see Fig. 1). The batteries must be installed with the positive (+) end to the left.

HYDRONIC (HOT WATER OR STEAM) HEATING SYSTEMS

This thermostat is set to operate properly with a forced-air heating system. If you have a hydronic heating system (a system that heats with hot water or steam), you must set the thermostat to operate properly with your system. Change the second option in the configuration menu to SL (see CONFIGURATION MENU, page 4).

CHECK THERMOSTAT OPERATION

If at any time during testing your system does not operate properly, contact a qualified service person.

Turn on power to the system.

Fan Operation

If your system **does not** have a **G** terminal connection, skip to **Heating System.**

1. Move FAN switch to **ON** position. The blower should begin to operate.
2. Move FAN switch to **AUTO** position. The blower should stop immediately.

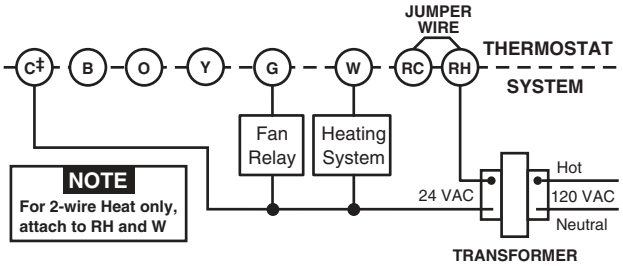

Figure 2. Typical wiring diagram for heat only, 3-wire, single transformer systems

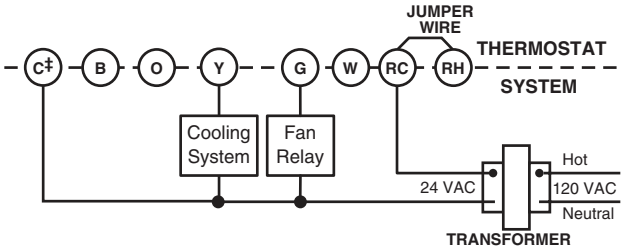

Figure 3. Typical wiring diagram for cool only, 3-wire, single transformer systems

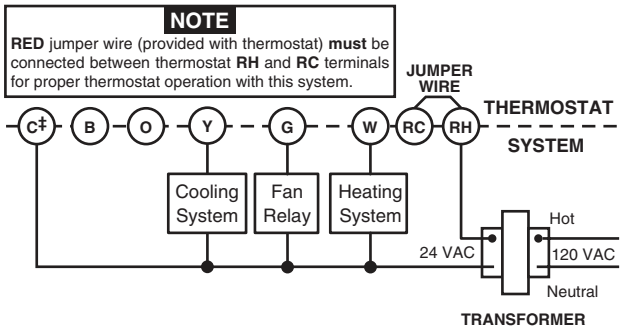

Figure 4. Typical wiring diagram for heat/cool, 4-wire, single transformer systems

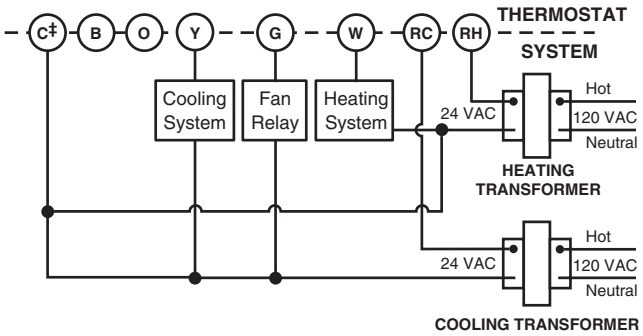

Figure 5. Typical wiring diagram for heat/cool, 5-wire, two-transformer systems

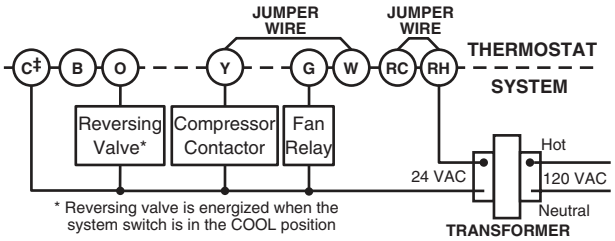

Figure 6. Typical wiring diagram for heat pump with reversing valve energized in COOL

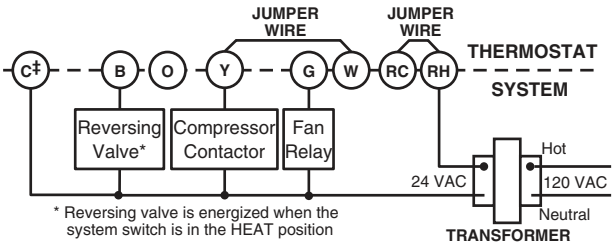

Figure 7. Typical wiring diagram for heat pump with reversing valve energized in HEAT

‡ The 24 Volt neutral connection to terminal C on the thermostat is not required if the batteries are replaced once a year with fresh "AA" Energizer® alkaline batteries.

Heating System

1. Move SYSTEM switch to **HEAT** position. If the heating system has a standing pilot, be sure to light it.
2. Press ⌃ to adjust thermostat setting above room temperature. The heating system should begin to operate.
3. Press ⌄ to adjust thermostat setting below room temperature. The heating system should stop operating.

Cooling System

⚠ CAUTION

To prevent compressor and/or property damage, if the outdoor temperature is below 50°F, DO NOT operate the cooling system.

1. Move SYSTEM switch to **COOL** position.
2. Press ⌄ to adjust thermostat setting below room temperature. The blower should come on immediately on high speed, followed by cold air circulation
3. Press ⌃ to adjust thermostat setting above room temperature. The cooling system should stop operating.

OPERATION

Before you begin programming your thermostat, you should be familiar with its features and with the display and the location and operation of the thermostat buttons. Your thermostat consists of two parts: the **thermostat cover** and the **base**. To remove the cover, pull it straight out from the base. To replace the cover, line up the cover with the base and press until the cover snaps onto the base.

The Thermostat Buttons and Switches

1. Raises temperature setting.
2. Lowers temperature setting.
3. TIME button.
4. PRGM (program) button.
5. RUN (run program) button.
6. HOLD temperature button.
7. FAN switch (**ON**, **AUTO**).
8. SYSTEM switch (**COOL**, **OFF**, **HEAT**).

The Display

9. Indicates day of the week.
10. **Flame icon** (🔥) is displayed when the SYSTEM switch is in the HEAT position. **Snowflake icon** (❄)is displayed (non-flashing) when the SYSTEM switch is in the COOL position. **Snowflake** is displayed (flashing) if the thermostat is in lockout mode to prevent the compressor from cycling too quickly.
11. Displays **"BATT"** or **"CHANGE"** when the 2 "AA" batteries are low and should be replaced. Only **"BATT"** or **"CHANGE"** and **"LO"** in the minutes field are displayed when batteries are low with no system power.
12. Alternately displays current time and temperature. Displays **"LO"** in the minutes field when batteries are low.
13. The word **"HOLD"** is displayed when the thermostat is in the HOLD mode. **"HOLD"** is displayed flashing when the thermostat is in a temporary HOLD Mode.
14. Displays currently programmed set temperature (this is blank when SYSTEM switch is in the **OFF** position).
15. Displays **"FLTR"** when the system has run for the programmed filter time period as a reminder to change or clean your air filter.

CONFIGURATION MENU

The configuration menu allows you to set certain thermostat operating characteristics to your system or personal requirements.

Press RUN to make sure the thermostat is in the run program mode, then press PRGM and RUN at the same time to enter the configuration menu. The display will show the first item in the configuration menu.

The configuration menu table summarizes the configuration options. An explanation of each option follows.

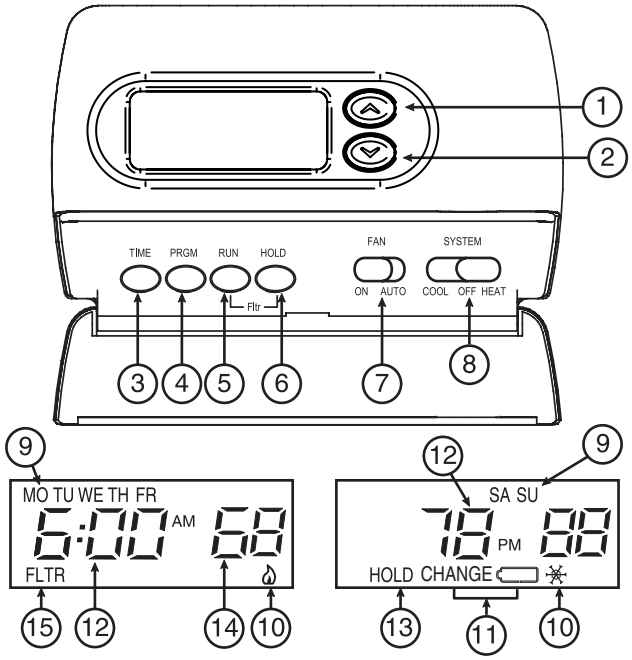

Figure 8. Thermostat display, buttons, and switches

Press HOLD to change to the next menu item or press TIME to go backwards to the previous item in the menu. To exit the menu and return to the program operation, press RUN. If no keys are pressed within fifteen minutes, the thermostat will revert to normal operation.

1) **Select Temporary Hold Time** - The thermostat can hold any temperature you set it to for the amount of time you select on this option. Your choices are 0:00 to 8:00 hours in 15 minute increments. 0:00 disables the function

   Example:

   1. You have selected 3:00 hours for the Temporary Hold time period.
   2. With the thermostat set to Heat or Cool, press HOLD **for approximately five seconds** until HOLD time (3:00 indicating 3 hours) appears as a setting reminder.
   3. After releasing the button, **"HOLD"** on the display will blink.
   4. Use ⌃ or ⌄ to set the temperature to your preference. The thermostat will maintain this temperature setting for 3 hours with **"HOLD"** blinking to remind you it is in Temporary Hold. After 3 hours the thermostat will go back to the program temperature and **"HOLD"** will no longer blink or display.

2) **Select FA or SL (Fast or Slow) Heating Cycle Rate** - The FA setting is frequently used for gas, oil or electric heat. The SL setting produces a longer heating cycle which is normally for hot water or steam (hydronic) systems. Both settings produce very accurate temperature control and can be set to your personal preference. FA cycles the system just under 1°F and the SL setting cycles at approximately 1.5°F.

3) **Select backlit display** - The display backlight improves display contrast in low lighting conditions. Selecting backlight **ON** will keep the light on for a short period of time after any key is pressed. Selecting **OFF** will keep the light off.

Configuration Menu

Step	Press Button(s)	Displayed (Factory Default)	Press ⌃ or ⌄ to select:	COMMENTS
1	**PRGM** and **RUN**	HOLD (0:00)	0 to 8 hrs (in 15 minute increments)	Select temporary Hold time
2	**HOLD***	ϕ (FA)	SL	Select FA or SL (Fast or Slow) heating cycle rate
3	**HOLD***	d-L (ON)	OFF	Select display backlight OFF or ON
4	**HOLD***	E (ON)	OFF	Select Energy Management Recovery OFF or ON
5	**HOLD***	Filter (000)	0 to 1950 hours (in 50 hour increments)	Select filter replacement run time
6	**HOLD***	LOC (OFF)	ON	Select compressor lockout OFF or ON
7	**HOLD***	0 HI (0)	4 LO to 4 HI	Select temperature display adjustment higher or lower
8	**HOLD***	(F)	C	Select temperature display to F or C
9	**RUN**			Returns to normal operation

* Press **HOLD** to advance to next item or **TIME** to move backwards to previous item

4) **Select Energy Management Recovery OFF or ON –** Energy Management Recovery (EMR) causes the thermostat to start heating or cooling early to make the building temperature reach the program setpoint at the time you specify. Heating will start 5 minutes early for every 1° of temperature required to reach setpoint. Cooling allows more time per degree because it takes longer to reach temperature.

   Example: You select EMR and have your heating programmed to 65° at night and 70° at 7 AM. If the building temperature is 65° the difference between 65° and 70° is 5°. Allowing 5 minutes per degree the thermostat setpoint will change to 70° at 6:35 AM.

5) **Select filter replacement run time** - The thermostat will display **"FLTR"** after a set time of operation. This is a reminder to change or clean your air filter. This time can be set from 0 to 1950 hours in 50 hour increments. **A selection of 000 will cancel this feature.** When **"FLTR"** is displayed, you can clear it by pressing HOLD and RUN at the same time. This resets the timer and starts counting the hours until the next filter change. Changing the time in the menu also resets the timer.

6) **Select Compressor Lockout LOC OFF or ON** - Selecting LOC ON will cause the thermostat to wait 5 minutes before turning on the compressor if the heating and cooling system loses power. It will also wait 5 minutes minimum between cooling cycles. This is intended to help protect the compressor from short cycling. Some newer compressors already have a time delay built in and do not require this feature. Your compressor manufacturer can tell you if the feature is already present in their system. When the compressor time delay occurs it will flash the (snowflake icon) for about five minutes then turn on the compressor.

7) **Select Temperature Display Adjustment 4 LO to 4 HI** - Allows you to adjust the room temperature display 4° higher or lower. Your thermostat was accurately calibrated at the factory but you have the option to change the display temperature to match your previous thermostat.

8) **Select F° or C° Readout** - Changes the display readout to Centigrade or Fahrenheit as required.

OPERATING FEATURES

Now that you are familiar with the thermostat buttons and display, read the following information to learn about the many features of the thermostat.

- **SIMULTANEOUS HEATING/COOLING PROGRAM STORAGE** — When programming, you can enter both your heating and cooling programs at the same time. There is no need to reprogram the thermostat at the beginning of each season.
- **TEMPERATURE OVERRIDE** — Press ⌃ or ⌄ until the display shows the temperature you want. The thermostat will override current programming and keep the room temperature at the selected temperature until the next program period begins. Then the thermostat will automatically revert to the program.
- **HOLD TEMPERATURE** — The thermostat can hold any temperature within its range for an indefinite period without reverting to the programmed temperature. Momentarily press HOLD button. **"HOLD"** will be displayed. Then choose the desired temperature by pressing ⌃ or ⌄. The thermostat will hold the room temperature at the selected setting until you press RUN button to start program operation again.
- **CONFIGURATION MENU** — Allows you to customize certain thermostat options.

PROGRAMMING YOUR THERMOSTAT

This section will help you plan your thermostat's program to meet your needs. For maximum comfort and efficiency, keep the following guidelines in mind when planning your program.

- When heating (cooling) your building, program the temperatures to be cooler (warmer) when the building is vacant or during periods of low activity.
- During early morning hours, the need for cooling is usually minimal.

Planning Your Program

Look at the factory preprogrammed times and temperatures shown in the sample schedule. If this program will suit your needs, simply press the RUN button to begin running the factory preset program.

If you want to change the preprogrammed times and temperatures, follow these steps.

Determine the time periods and temperatures for your daily programs. You must program four periods for both the weekday and weekend program. However, you may use the same heating and cooling temperatures for consecutive time periods. You can choose start times, heating temperatures, and cooling temperatures independently for each day programs (for example, you may select 5:00 AM and 70° as the Monday **1st period heating** start time and temperature, and also choose 7:00 AM and 76° as the Monday **1st period cooling** start time and temperature).

Use the following table to plan your program time periods and the temperatures you want during each period. Fill in the complete table to have a record of your programs.

Entering Your Program

Follow these steps to enter the heating and cooling programs you have selected.

Set Current Time and Day

1. Press TIME button once. The display will show the hour only.

   EXAMPLE: 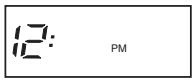

SAMPLE
Heating/Cooling Schedule Plan (Factory Program)

Period		ALL DAYS OF THE WEEK	
		Start Time	Temperature
HEAT	1ST	6:00 AM	70 F
	2ND	8:00 AM	62 F
	3RD	5:00 PM	70 F
	4TH	10:00 PM	62 F
COOL	1ST	6:00 AM	78 F
	2ND	8:00 AM	85 F
	3RD	5:00 PM	78 F
	4TH	10:00 PM	82 F

2. Press and hold either ⌃ or ⌄ until you reach the correct hour and AM/PM designation (**AM** begins at midnight; **PM** begins at noon).
3. Press TIME once. The display window will show the minutes only.

   EXAMPLE:

4. Press and hold either ⌃ or ⌄ until you reach the correct minutes.
5. Press TIME once. The display will show the day of the week.
6. Press ⌃ or ⌄ until you reach the current day of the week.
7. Press RUN once. The display will show the correct time and room temperature alternately.

Enter Heating Program

1. Move the SYSTEM switch to **HEAT**.
2. Press PRGM once. "**MO**" (indicating Monday program) will appear in the display. Also displayed are the currently programmed start time for the **1st heating** period and the currently programmed temperature (flashing).

   EXAMPLE:

   This display window shows that for Monday's 1st heating period, the start time is 6:00 AM, and 70° is the programmed temperature (this example reflects factory preprogramming).
3. Press ⌃ or ⌄ to change the displayed temperature to your selected temperature for Monday's 1st heating program period.
4. Press TIME once (the programmed time will flash). Press ⌃ or ⌄ until your selected start time for Monday's 1st heating program period appears. The time will change in 15 minute increments. When your selected time is displayed, press TIME again to return to the change temperature mode.
5. Press PRGM once. The currently programmed start time and setpoint temperature for the **Monday's 2nd heating** program period will appear.
6. Repeat steps 3 and 4 to select the start time and heating temperature for Monday's 2nd heating program period.
7. Repeat steps 3 through 5 for the 3rd and 4th heating program periods. Monday heating programs are now complete.

Heating/Cooling Schedule Plan

	PERIOD 1				PERIOD 2				PERIOD 3				PERIOD 4			
	HEAT		COOL		HEAT		COOL		HEAT		COOL		HEAT		COOL	
	Time	Temp	Time	Temp	Time	Temp	Time	Temp	Time	Temp	Time	Temp	Time	Temp	Time	Temp
Mon																
Tues																
Wed																
Thur																
Fri																
Sat																
Sun																

NOTE

If you are programming your thermostat for the first time and you want programming for all days of the week to be the same as Monday's program, press RUN or HOLD at this point, and proceed to **Enter Cooling Program**. (This simplified COPY DAY feature only works the first time you program your thermostat. If you want to copy one day's programming to a specific day programming, refer to **COPY DAY FUNCTION** in **OPERATING FEATURES**. If you are changing your thermostat's programming, you must program each day separately.)

8. Press HOLD once. "**TU**" (indicating Tuesday program) will appear in the display, along with the start time for the 1st heating period and the currently programmed temperature.
9. Repeat steps 3 through 7 to complete Tuesday's heating programming.
10. Continue entering each day's programming until all heating periods time and temperatures have been entered.
11. When you have completed entering your heating program, press RUN.

Enter Cooling Program

⚠ CAUTION

If the outside temperature is below 50°F, disconnect power to the cooling system before programming. Energizing the air conditioner compressor during cold weather may cause personal injury or property damage.

1. Move SYSTEM switch to **COOL** position.
2. Follow the procedure for entering your cooling program, using your selected cooling times and temperatures.

CHECK YOUR PROGRAMMING

Follow these steps to check your thermostat programming one final time before beginning thermostat operation.

1. Move SYSTEM switch to **HEAT** position.
2. Press PRGM to view the 1st Monday heating period time and temperature. Each time you press PRGM, the next heating period time and temperature will be displayed in sequence for Monday. Press HOLD to display Tuesday's 1st heating period, and press PRGM to view each of the remaining Tuesday's heating period time and temperatures. To view each day's heating program, press HOLD to change day and them press PRGM to look at each programming period for the day. (You may change any time or temperature during this procedure.)
3. Press RUN.
4. Move SYSTEM switch to **COOL** position.
5. Repeat step 2 to check cooling program.
6. Move SYSTEM switch to **HEAT** or **COOL** and press RUN to begin program operation.

YOUR THERMOSTAT IS NOW COMPLETELY PROGRAMMED AND READY TO PROVIDE MAXIMUM COMFORT AND EFFICIENCY!

TROUBLESHOOTING

Reset Operation

If a voltage spike or static discharge blanks out the display or causes erratic thermostat operation you can reset the thermostat by pressing ⌃, ⌄ and TIME at the same time. This also resets the factory defaults to the configuration menu and program. If the thermostat has power, has been reset and still does not function correctly contact your heating/cooling service person or place of purchase.

Batteries

For optimum performance, we recommend replacing batteries once a year with fresh "AA" Energizer® alkaline batteries.

Symptom	Possible Cause	Corrective Action
No Heat/No Cool/No Fan (common problems)	1. Blown fuse or tripped circuit breaker. 2. Furnace power switch to OFF. 3. Furnace blower compartment door or panel loose or not properly installed.	Replace fuse or reset breaker. Turn switch to ON. Replace door panel in proper position to engage safety interlock or door switch.
No Heat	1. Pilot light not lit. 2. SYSTEM Switch not set to **HEAT**. 3. Loose connection to thermostat or system. 4. Furnace Lock-Out Condition. Heat may also be intermittent. 5. Heating System requires service or thermostat requires replacement.	Re-light pilot. Set SYSTEM Switch to **Heat** and raise setpoint above room temperature. Verify thermostat and system wires are securely attached. Many furnaces have safety devices that shut the system down when a lock-out condition occurs. If the heat works intermittently contact the furnace manufacturer or local service person for assistance. Diagnostic: Set SYSTEM Switch to **HEAT** and raise the setpoint above room temperature. Within a few seconds the thermostat should make a soft click sound. This sound usually indicates the thermostat is operating properly. If the thermostat does not click, try the reset operation listed above. If the thermostat does not click after being reset contact your heating and cooling service person or place of purchase for a replacement. If the thermostat clicks, contact the furnace manufacturer or a service person to verify the heating system is operating correctly.

TROUBLESHOOTING

Symptom	Possible Cause	Corrective Action
No Cool	1. SYSTEM Switch not set to **COOL** below 2. Loose connection to thermostat or system. 3. Cooling System requires service or thermostat requires replacement.	Set SYSTEM Switch to **COOL** and lower setpoint room temperature. Verify thermostat and system wires are securely attached. Same procedure as diagnostic for No Heat condition except set the thermostat to **COOL** and lower the setpoint below the room temperature. There may be up to a five minute delay before the thermostat clicks in Cooling if the compressor lock-out option is selected in the configuration menu (Item 6).
Heat, Cool or Fan Runs Constantly.	1. FAN Switch set to Fan ON. 2. Possible short in wiring. 3. Possible short in thermostat. 4. Possible short in Heat/Cool/Fan system.	Check each wire connection to verify they are not shorted or touching together. No bare wire should stick out from under terminal screws. Try resetting the thermostat. If the condition persists the manufacturer of your system or service person can instruct you on how to test the Heat/ Cool system for correct operation. If the system operates correctly, replace the thermostat.
Furnace Cycles Too Fast or Too Slow (narrow or wide temperature swing)	1. The location of the thermostat and/or the size of the Heating System may be influencing the cycle rate.	Item 2 in the Configuration Menu is the adjustment that controls the cycle rate. If an acceptable cycle rate is not achieved using the FA (Fast) or SL (Slow) adjustment contact a local service person for additional suggestions.
Cooling Cycles Too Fast or Too Slow (narrow or wide temperature swing)	1. The location of the thermostat and/or the size of the Cooling System may be influencing the cycle rate.	The cycle rate for cooling is fixed and can not be adjusted. Contact a local service person for suggestions.
Thermostat Setting and Thermometer Disagree	1. Thermostat thermometer setting requires adjustment.	The thermometer can be adjusted +/- 4 degrees as listed in item 7 of the Configuration Menu. No other adjustment is possible.
Clock Loses or Gains Time	1. Loss of power to thermostat and low batteries.	The thermostat will maintain its program in memory even with no power/no batteries but the clock time will be incorrect when power is restored. See No Heat/No Cool/No Fan (common problems) above for items to check in the system.
Heat or Cool Starts Early	1. EMR activated	See Configuration Menu (Item 4).
Thermostat Does Not Follow Program	1. AM or PM set incorrectly in program. 2. AM or PM set incorrectly on the clock. 3. Voltage spike or static discharge.	Check current clock and program settings including the AM or PM designations for each time period. If a voltage spike or static discharge occurs use the Reset Operation listed above.
Blank Display and/or Keypad Not Responding	1. Loss of power and dead batteries. 2. Voltage Spike or Static Discharge.	Replace batteries and check heat/cool system for proper operation. If a voltage spike or static discharge occurs use the Reset Operation listed above.

HOMEOWNER HELP LINE: 1-800-284-2925

White-Rodgers is a division of Emerson Electric Co.

The Emerson logo is a trademark and service mark of Emerson Electric Co.

White Rodgers™

www.white-rodgers.com

EMERSON™ Climate Technologies